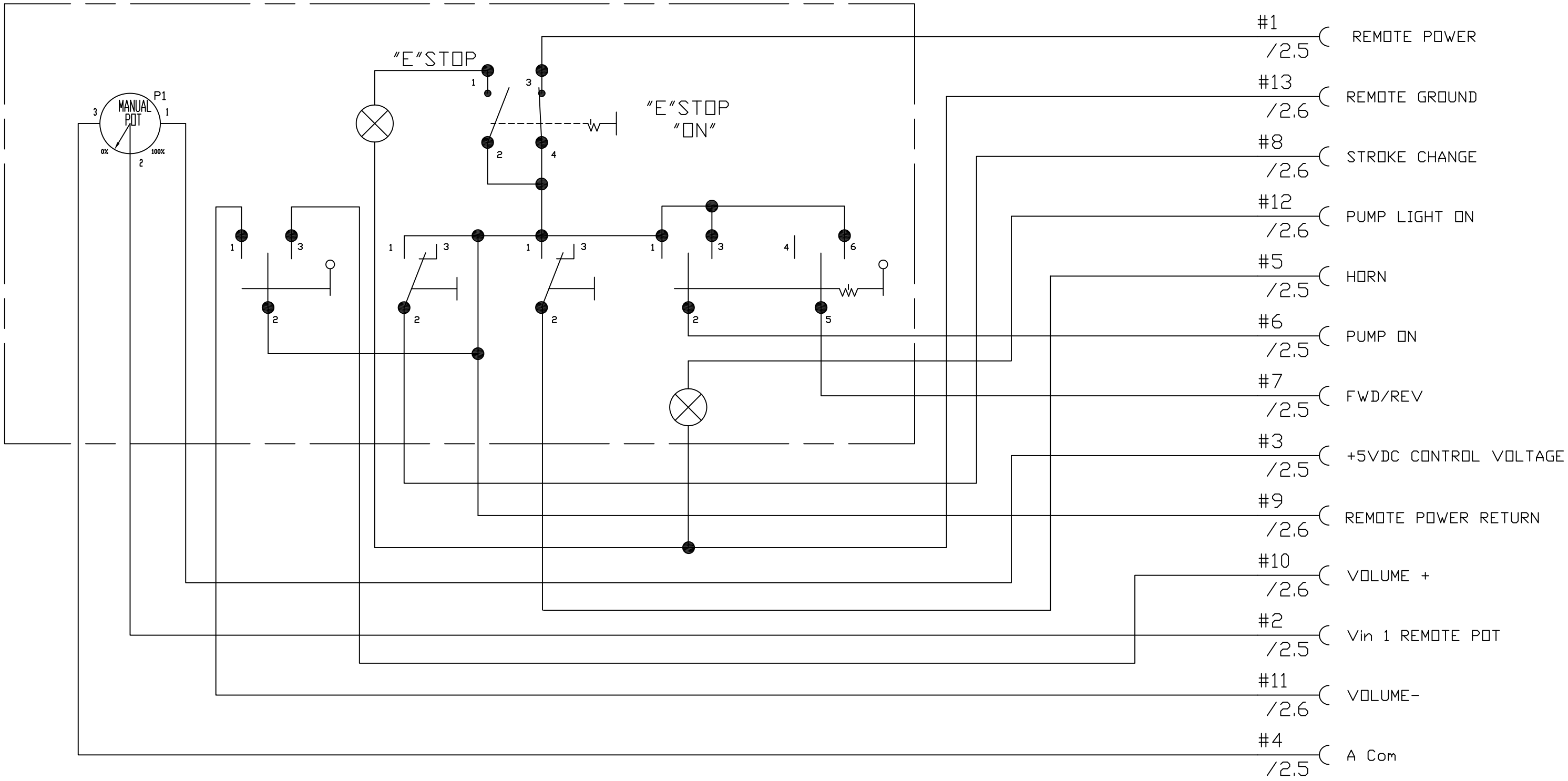


*MANUAL POTENTIOMETER* VOLUME CONTROL STROKE CHANGE HORN PUMP ON REVERSE

| REV | BY | DATE | DESCRIPTION |
|---|---|---|---|

DO NOT SCALE PRINT

THIS DRAWING IS THE PROPERTY OF KAR-TECH INC. AND ALL THE INFORMATION THEREIN IS CONFIDENTIAL AND MUST NOT BE MADE PUBLIC, NOR COPIED, NOR USED TO THE DISADVANTAGE OF KAR-TECH INC. AND IS SUBJECT TO RETURN ON DEMAND.

TITLE: MAIN CONTROL INTERNAL WIRING

CAD DRAWING DO NOT REVISE MANUALLY

| IMPLIED TOLERANCE | |
|---|---|
| X.X | ± .1 |
| X.XX | ± .06 |
| X.XXX | ± .015 |
| FRACTIONAL | ± 1/8 |
| ANGULAR | ± 0.5 deg. |

| SCALE | DRAWN | DATE | CHECKED | | DRAWING NO. |
|---|---|---|---|---|---|
| FULL | D.R. | 03-23-11 | | PAGE - 3 | 88685 |