TABLE OF CONTENTS

GENERAL **GEN'L**

TABLE OF CONTENTS ……. 00
INTRODUCTION ……. 01
PRODUCT DESCRIPTION ……. 02
TECHNICAL SPECIFICATIONS ……... 04
SAFETY AWARENESS AND PRECAUTIONS ……... 05
SAFETY ALERT DECALS ……. 07
OPERATOR QUALIFICATION ……. 10

OPERATION **OPER.**

PRE-OPERATION INSPECTION ……. 00
GETTING ACQUAINTED ……. 02
CONTROL FAMILIARIZATION ……. 03
OPERATION INSTRUCTIONS ……. 06
OPERATIONAL TROUBLESHOOTING TIP ……. 09

MAINTENANCE **MAINT**

PREVENTATIVE MAINTENANCE ……. 00
SCHEDULED INSPECTION ……. 01
GENERAL MAINTENANCE AND SERVICE ……. 02
FILTER – AIR MOTOR ……. 02
AIR MOTOR LUBRICATOR ……. 03
GEAR CASE ……. 04
AUTOMATIC PAD CLAMP SYSTEM ……. 05
ADJUSTMENT ……. 06
RISER PLATE INSTALLATION ……. 06
FELT SEAL ……. 07
ROCK SHEAR ……. 08
RUBBER SEALING PAD ……. 09

SCHEMATICS

PARTS

GROUP 00 HOW TO USE PARTS MANUAL
GROUP 10 FINAL INSTALLATION
GROUP 30 BASE GEAR INSTALLATION
GROUP 40 HOPPER AND PAD INSTALLATION
GROUP 50 AIR INLET INSTALLATION
GROUP 60 ACCESSORY INSTALLATION
GROUP 70 OPTIONAL INSTALLATION

VENDORS

FIGURE 01 GAST AIR MOTOR
FIGURE 02 WATTS AIR FILTER AND LUBRICATOR

SERVICE BULLETINS

SB 001 WARRANTY PROGRAM

INTRODUCTION

A major factor in the minds of the operators and maintenance personnel should be use of the machine in a **SAFE** and **PROFICIENT** manner. This can only be accomplished by having a better understanding of the operation and maintenance of the **MODEL *209 DRY MIX* PNEUMATIC SPRAYING MACHINE.**

This manual (Part Number 20496) is provided to assist in accomplishing this goal. It is considered to be a **VALUABLE** tool to our **CUSTOMERS**. It includes an Operation Section, General Maintenance Procedures, and Illustrated Parts Section. Everyone involved with the operation, maintenance and repair of the machine should be given and should take this opportunity to **READ** and thoroughly **UNDERSTAND** all sections of this manual. It is in their **BEST INTEREST** to do so.

The manual covers and is applicable to a **STANDARD EQUIPPED MACHINE**. Depending on the circumstances, it is possible some machines may be supplied with various options and specialized equipment. ***REED*** has tried to incorporate in the manual the appropriate data for these machines. If by chance, service information is not found, it is suggested you contact the ***REED* SERVICE DEPARTMENT** which will forward the proper information if available.

All product descriptions, illustrations and specifications found throughout this manual were in effect at the time the manual was released for printing. It should be noted ***REED* RESERVES THE RIGHT TO MAKE CHANGES IN DESIGN OR TO MAKE ADDITIONS TO OR IMPROVEMENTS IN THE PRODUCT WITHOUT IMPOSING ANY OBLIGATIONS UPON ITSELF TO INSTALL THEM ON PRODUCTS PREVIOUSLY MANUFACTURED.**

N O T E

If you have not yet done so, please record the SERIAL NUMBER of your MODEL 209 on the cover page of this manual. Throughout this manual, reference may be made to the serial number. When talking to our SERVICE DEPARTMENT or ORDERING PARTS, use of the serial number will assist us in giving prompt and accurate response and service.

PRODUCT DESCRIPTION

The ***REED*** **MODEL** ***209*** is a dry mix pneumatic spraying machine designed specifically for the purpose of inducing granular materials into a compressed air stream. The material is then conveyed by the air through a hose line delivery system to a nozzle, where water is introduced which then mixes with the dry material and air and then is sprayed from the nozzle for the specific application. The machine is of a simple design, compact, lightweight, and is of a rugged construction to withstand the work environment surrounding concrete spraying.



The MODEL ***209*** utilizes as its main power a 5HP air powered motor. The air supply for operations of the motor is provided by an external compressed air source. The air motor through an oil bath spur gear arrangement, is used to rotate the feed bowl or bowl. A means is provided to vary the rotating speed for the feed bowl, enabling it to rotate through a range from 5 to 50 RPM, depending on the feed rate desired.

In operation, dry material is placed into the hopper where it is allowed to freely fall through the openings and into the "U" shaped pockets of the feed bowl. As the feed bowl rotates, the pockets which are now loaded with material, pass under a molded rubber sealing pad which is set tight against the steel portion of the wheel. The rubber pad and back-up plate, each contain two (2) specifically designed openings. One is used as an inlet for the compressed air and the other is used as an outlet for the air-material mixture. These openings are designed to align with the "U" shaped pockets of the feed bowl. As the loaded pockets pass under the pad, the compressed air which is directed to the inlet opening of the pad, pushes the material from the pockets of the feed bowl and up through the pad's outlet opening where it travels through the gooseneck and on into the delivery hose and on to the nozzle. With the constant even rotation of the feed bowl, the material can be exhausted into the hose in an extremely steady flow.

Dependent on the application, the ***REED*** **MODEL** ***209*** is easily field modified to interchange the feed bowl and hopper if so desired. The feed bowl is selected for the number of "U" shaped pockets, 18 of 16 and the size of aggregate used in the mix ranging from 1/8" to ¼".

For the protection of the air motor and other air related components against premature wear, the system is equipped with an air filter and lubricator. The filter is used to remove any liquids and solids from the incoming compressed air. The lubricator is used to induce a controlled oil flow into the air stream where it is atomized into an airborne oil fog which is carried to the air motor.

A dust suppression kit is installed on the **MODEL** ***209*** when using dry materials. The kit consists of a dust box weldment located in the feed bowl housing. An exhaust hose has one end connected to the housing and the other is connected to a bagged container. The purpose of the dust suppression unit is to direct the dust laden air that isn't exhausted through the gooseneck, to the dust bag in lieu of being blown into the hopper. This is essential and must be used in conjunction with 20090 pads.

Controls for complete operation of the unit is at the machine. They include the ability to turn on and regulate the air power to the motor and feed bowl, to monitor the pressure of the systems and set the automatic clamping of the pads.

SPECIFICATIONS

TECHNICAL DATA	U.S.	METRIC
• Output Maximum	9 yds³/hr	6.8m³/hr
• Aggregate Size – Maximum	¼	10mm
• Air Motor	5 HP	3.7 KW
• Conveying Distance – Horizontal Max	1000 ft.	305m
• Conveying Distance – Vertical Max	300 ft.	91m
• Hose Size – I.D.	¾" to 1½"	19mm to 38mm
• Gross Weight (Approx.)	380 lbs	172 kgs

Material conveying distances shown are to be used only as a guide. Maximum attainable distances and maximum aggregate size are all dependent on mix design and material hose diameters. Maximum output and distances cannot be reached simultaneously.

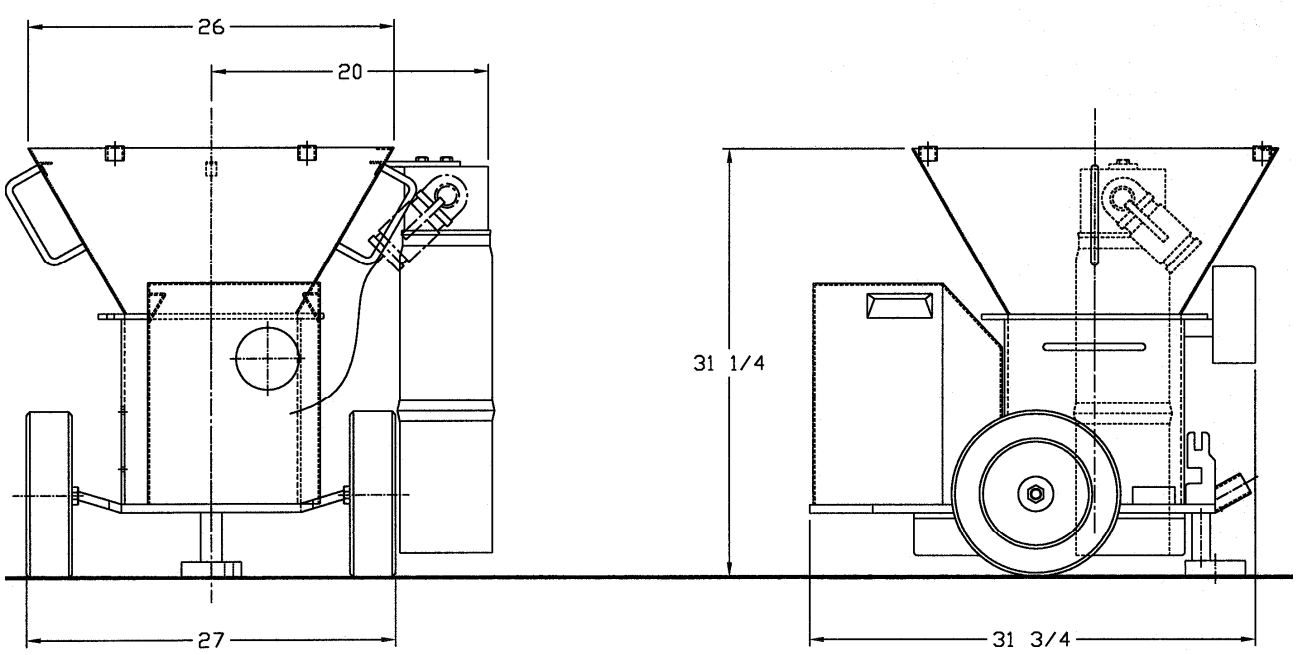

REED Production Estimates With 100 Ft (50m) Hose

Hose Size	Output/hr	Max Air Required @ 100 PSI (7kg/cm²)	Aggregate	Feed bowl
¾" (1.9cm)	2 yd³ (1.5m³)	125cfm (3.5m³/min)	1/8" (3.5mm)	18 PKT
1" (2.5cm)	4 yd³ (3.1m³)	210cfm (6.0m³/min)	¼" (7mm)	16-18 PKT
1¼" (3.2cm)	6 yd³ (4.6m³)	315cfm (9.0m³/min)	¼" (7mm)	16-18 PKT
1¼" (3.2cm)	6 yd³ (4.6m³)	315cfm (9.0m³/min)	3/8" (10mm)	16-18 PKT
1½" (3.8cm)	9 yd³ (6.9m³)	365cfm (10.5m³/min)	3/8" (10mm)	16 PKT

SAFETY AWARENESS AND PRECAUTIONS

The ***REED*** **MODEL *209*** dry mix pneumatic spraying machine is only to be used for the purpose of inducing granular materials into a compressed air stream which is then conveyed through a hose line to a spraying nozzle.

All personnel assigned to operate, repair or troubleshoot the **MODEL *209***, must be thoroughly familiar with this Technical Manual (P/N 20496). For the protection of yourself and others around you, it is of utmost importance that the **WORK** be done **SAFELY**. One of the best ways to accomplish this is to fully **UNDERSTAND** and **KNOW** the job you do. If there is any doubt that what you are doing is **UNSAFE**, even marginally, obtain assistance from other trained/qualified personnel.

During operation, troubleshooting, or repair, problems may arise or be encountered that seem singular, but may in fact be due to several causes. These need to be sorted out and identified before proceeding with the task at hand. The information contained in this technical manual can be used to assist in the safest and best manner of operating and repairing the **MODEL *209***.

ADVISORY LABEL LOCATION

Cautionary signal word (Warning-Caution) may appear in various locations throughout this manual. Information accented by one of these signal words must be observed to minimize the risk of personal injury to service personnel, or the possibility of improper service methods which may damage the pump or render it unsafe. Additional Notes are utilized to emphasize areas of procedural importance and provide suggestions for ease of repair. The following definitions indicate the uses of these use of these advisory labels as they appear throughout the manual:

⚠ *C A U T I O N*

Directs attention to unsafe practices, which could result in damage to equipment and possible subsequent personnel injury or death if proper precautions are not taken.

⚠ *W A R N I N G*

Direct Attention to unsafe practices, which could result in personnel injury or death if proper precautions are not taken.

N O T E

An operating procedure, practice, condition, etc., which is essential to emphasize.

--------THINK SAFETY---------THINK SAFETY---------

No matter how often it is said or pointed out, there are people who have a tendency to **IGNORE** safe operation until it becomes too **LATE**. Don't be this type of person. Keep **SAFETY** utmost in your mind.

The following points out some pretty **COMMON** conditions and situations that you might encounter at one time or another. **BE ALERTED** to these and try to **PREVENT** the inevitable. They may seem simple, but are often the **MOST OVERLOOKED.**

- Use only qualified operators and nozzlemen who know the machine.
- Use only qualified maintenance personnel who understand the systems.
- Wear protective equipment such as hard hats, goggles, and dust masks in close quarters.
- Keep work area clear of unauthorized personnel
- Level machine on uneven terrain and slopes.
- Do not operate machine in traffic lanes. Always place cones and barricades around the unit.
- Don't clean, lubricate, or make maintenance adjustments while unit is in operation.
- Keep safety decals and operation instructions legible.
- Do not alter or disconnect safety devices.
- Whipcheck cables or chain safety couplings on air supply hoses.
- Rubber gloves are to be worn by workmen with sensitive skin subject to cement burn.
- Use only sturdy and safe lifting devices, platforms and scaffolding for those spraying operations that are performed off the ground. All platforms should be equipped with safety rails.
- Never remove the hopper screen and put your hands into the hopper.
- Report items that need attention or require service.

⚠ *W A R N I N G*

BETTER SAFE THAN SORRY – DON'T TAKE CHANGES THAT COULD CAUSE INJURY TO YOU AND/OR OTHERS.

YOUR SAFETY IS OUR UTMOST CONCERN AND YOUR RESPONSIBILITY

SAFETY ALERT DECALS

D A N G E R ------ C A U T I O N ------ W A R N I N G decals are designed for your protection. They are placed at appropriate areas on the machine to be constant reminders of the ever-present dangers. Know and adhere to the information they provide.

WARNING

ALWAYS WEAR SAFETY GLASSES
WHEN OPERATING THIS MACHINE

WARNING!

The wear pad area of this machine is extremely dangerous when the wear pad and Pad back-up assembly are removed.

It is essential that strict safety procedures be followed before performing any work in the wear pad area.

If maintenance must be performed in this area then proceed as follows:

(1) Shut off power.
air / electric

(2) Disconnect air feed line or electric cord.

Work in the wear pad area can now be performed safety.

Upon completion of this work, reconnect air feed line or electric cord, and restore power.

WARNING!

The inside of the hopper of this machine has moving parts which are extremely dangerous.

It is essential that strict safety procedures be followed before any work is done in-side the hopper.

The screen on the hopper is bolted in a closed position to restrict access. If maintenance must be performed inside the hopper, proceed as follows:

(1) Shut off power.
air / electric

(2) Disconnect air feed line or electrical cord.

(3) Remove bolts securing the hopper screen

Work inside the hopper may now be performed safety.

Upon completion of this work, replace the bolts and secure the hopper screen in a closed position. Reconnect air feed line or electrical cord and restore power.

CAUTION **DO NOT LIFT THIS MACHINE BY HOPPER HANDLES. USE SLINGS UNDER MACHINE.**



DANGER

DO NOT PUT HANDS OR FEET
IN HOPPER AT ANY TIME.
DEATH OR SERIOUS INJURY
MAY RESULT. IF WORK MUST
BE PERFORMED INSIDE HOPPER
SEE OPERATORS MANUAL FOR
SAFETY PROCEDURES.

OPERATOR QUALIFICATIONS

Making the choice for an operator and nozzleman is a vital decision as it affects safety and productivity. The **MODEL *209*** has been thoroughly inspected and tested by the ***REED*** Quality Control Department prior to shipment. The design of the unit incorporates several built-in safety features and also allows for an average skilled person to readily become proficient in the safe operation of the **MODEL *209***. The unit is a pressurized material pump and can be potentially **DANGEROUS** in the hands of **UNTRAINED** or **CARELESS OPERATORS.**

Knowing the characteristics of the machine and function of the controls are important to **SAFE, PROPER OPERATION** and **USE**.

It is the responsibility of the users to read and comply with the following rules and information designed to promote **SAFETY** and **UNDERSTANDING** of the **MODEL *209*** spraying machine.

- The first requirement for any user/operator is to obtain a thorough understanding of the operating characteristics and limitations of the machine. This should not be overlooked regardless of their prior experience with similar type equipment.

- Only **QUALIFIED TRAINED** personnel who have been authorized must be allowed to operate the **MODEL *209***. A Qualified Trained Operator is one who has **READ** and **UNDERSTOOD** the instructions in this manual and is thoroughly familiar with the operating characteristics and limitations of the machine.

- Individuals who cannot **READ** and **UNDERSTAND** the signs, warnings, notices and operating instructions that are part of the job, in the language in which it is printed **MUST NOT BE ALLOWED** to operate the **MODEL *209***.

- Know and follow all cautions, warnings, and operating instructions on the machine.

- Repair and adjustments must only be made by **QUALIFIED TRAINED** personnel.

- No modification is to be made to the machine without prior written consent of the ***REED*** Customer Service Department.

- Attach a **SIGN-OFF** sheet on the unit to enable the operator to report any damage, defects, problems, or accidents to his work supervisor.

- Understand and **OBEY** all applicable Local and Government statues and regulations applying to safe operation and use of material pumping machines.

AN UNKNOWING OPERATOR IS AN UNSAFE OPERATOR
AND A SORRY OPERATOR

PRE-OPERATION INSPECTION

The **CONDITION** of the unit prior to start-up is a very **IMPORTANT** factor as it directly affects the operator's safety as well as those around him. It should be a common practice that the operator performs a general inspection of the ***REED*** **MODEL *209***, before each day's operation.

The purpose of the operator's inspection is to keep the equipment in **PROPER** working condition and to **DETECT** any sign of malfunction during normal operations between scheduled maintenance checks.

DOWNTIME is **COSTLY** and can possibly be prevented by taking a few minutes prior to start-up to do a thorough walk around inspection. This inspection must be performed each day before the unit is operated. Report any damage or faulty operation immediately. If need be, attach a sign on the machine which states--------**DO NOT OPERATE**-------. Repair any discrepancies before use.

Some of the major items to be considered for your inspection include the following:

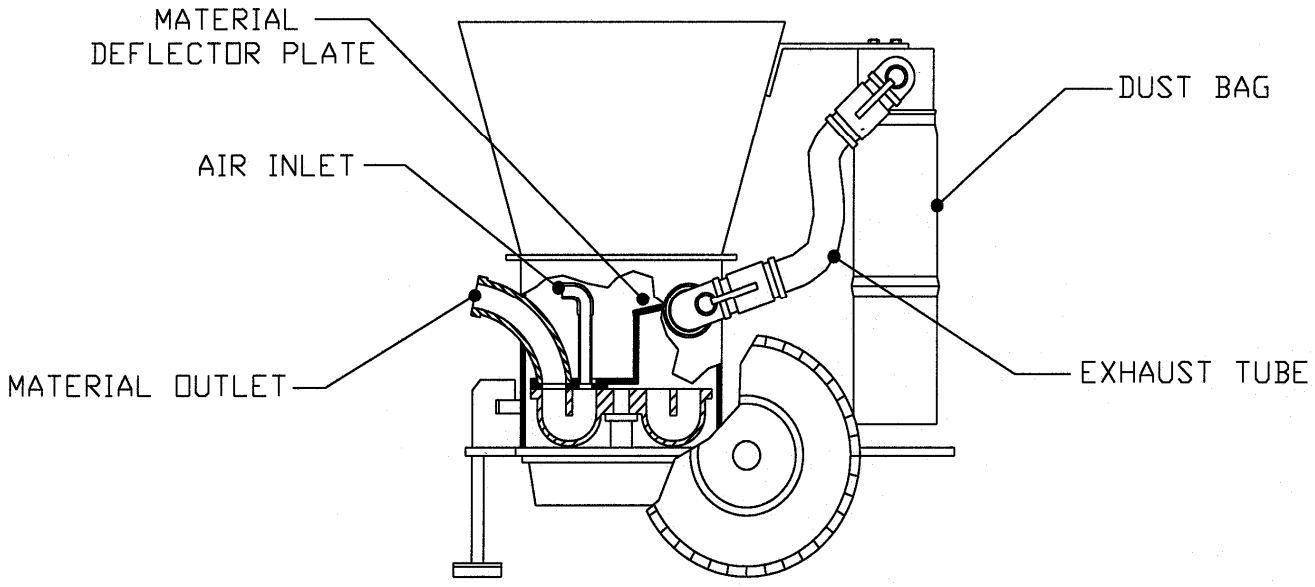

1. OVERALL MACHINE CONDITION

- External structural damage
- Hopper screen in place
- Lock pins, chains, and retainers in place
- Motor cover and clasps secure

- Wheel nuts tight
- Decals, placards, warning signs legible
- Unit is clean and free of concrete build-up
- Feed bowl wear surface is clean and flat
- Wear pad in good condition
- Gooseneck liner is in good condition

2. **AIR SYSTEM**

- Loose or damaged hoses, tubing, fittings
- Air leaks
- Air valves and control levers
- Condition of gauges
- Regulator operation
- Separator filter and lubricator
- Dust control unit installed

3. **DRIVE SYSTEM**

- Air motor secure
- Gear box oil at proper level
- Condition of feed bowl, seals, and wear pad
- Pad adjustment cylinder secure
- Outlet nozzle secure
- Adjustment knobs tight

⚠ *C A U T I O N*

Defective components, structural damage, missing parts or equipment malfunctions jeopardize the SAFETY *of the operator and other personnel and can cause extensive damage to the machine. A poorly* ***MAINTAINED*** *machine can become the greatest* ***OPERATIONAL HAZARD*** *you may encounter.*

GETTING ACQUAINTED
(UNIT FAMILIARIZATION)

As previously indicated, it is important from a **SAFE** operational standpoint that you , the **OPERATOR**, know your machine. This means the function of each control as to what happens when it is activated, how it might interact with other functions and any limitations which might exist. A **GOOD UNDERSTANDING** of the controls and capabilities will enhance operation and assure maximum operating efficiency and **SAFETY**.

These next few pages will assist you in **GETTING ACQUAINTED** with the **MODEL *209***. Carefully study them.

HOPPER AND PAD INSTALLATION
(SEE PART SECTION GROUP 40)

AIR INLET AND VALVE INSTALLATION
(SEE PART SECTION GROUP 50)



BASE GEAR INSTALLATION
(SEE PART SECTION GROUP 30)

ACCESSORY INSTALLATION
(SEE PART SECTION GROUP 60)

CONTROL AND COMPONENT FAMILIARIZATION

The **MODEL *209*** is equipped with various valve controls, pressure gauges, and adjustment controls. Most of the controls are located on the right side near the front of the unit. Each control is dedicated to a specific function for the operation of the unit. These are noted below.

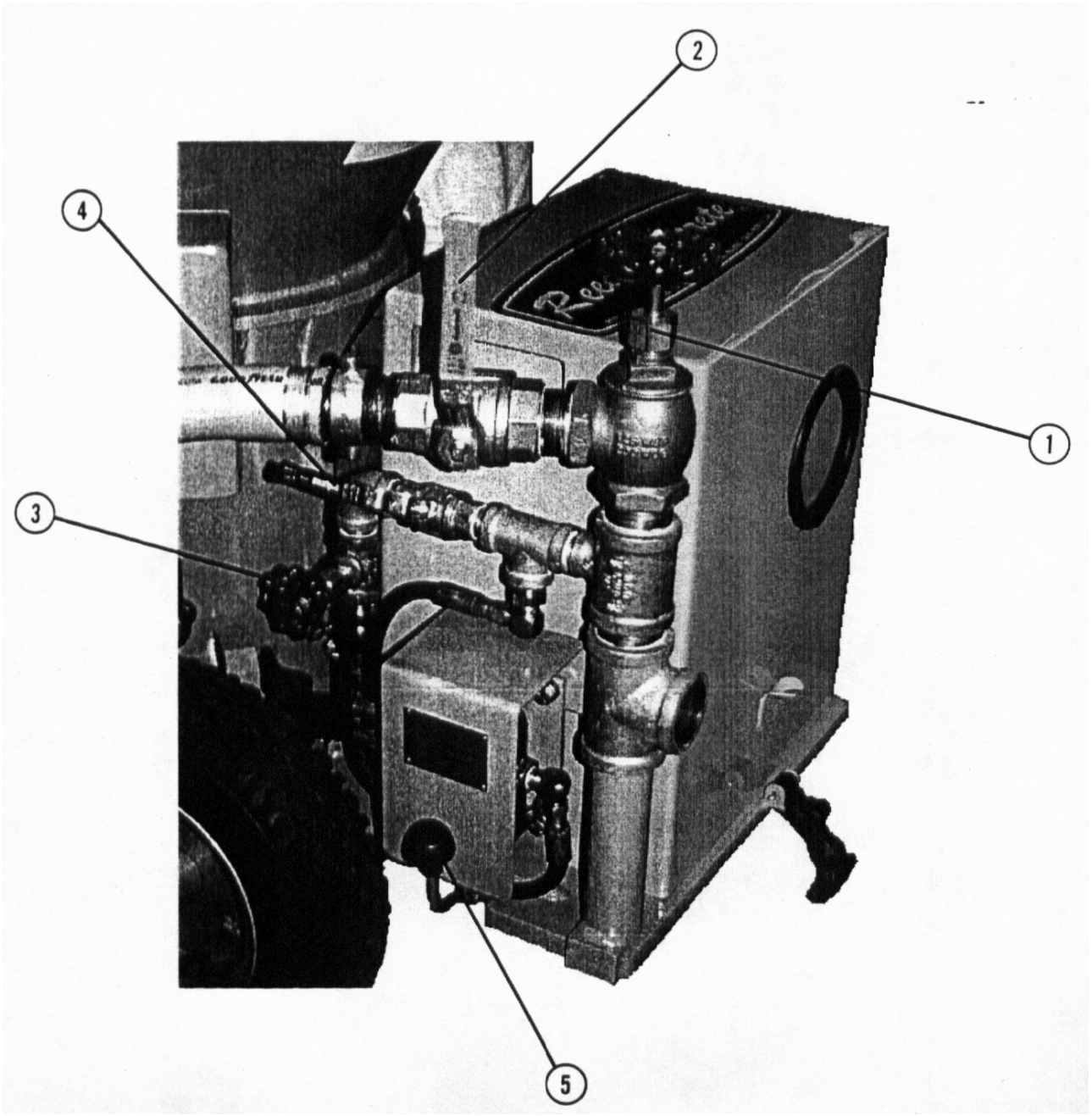

1. THROTTLE VALVE – FEED BOWL

This is a globe type valve and is used to throttle the air flow to the feed bowl for exhausting of the material. The throttle valve can be adjusted for a minimum to maximum air flow. Turn knob counterclockwise to **INCREASE** air flow and clockwise to **DECREASE** air flow.

2. MATERIAL FEED VALVE

This is a quarter turn valve used to control the air flow (**ON – OFF)** to the feed bowl. This allows the air to be turned on-off without disturbing the setting of the throttle valve. Valve is closed (**OFF**) with handle turned perpendicular to the pressure line and open (ON) with handle turn in a parallel position to the pressure line.

3. THROTTLE VALVE – AIR MOTOR

This is a globe type valve and is used to throttle the air flow to the air motor for its operation. The throttle valve can be adjusted for a minimum to maximum air flow. Turn knob counterclockwise to **INCREASE** air flow which in turn increases the RPM of the motor and feed bowl and clockwise to **DECREASE** the air flow or speed.

4. AIR MOTOR VALVE

This is a quarter turn valve used to control the air flow (**ON-OFF**) to the feed bowl. This allows the air to be turn on-off, starting-stopping of motor, without disturbing the setting of the air motor throttle valve. Valve is closed (**OFF**) with handle turned perpendicular to the pressure line and open (**ON**) with handle turned in a parallel position to the pressure line.

5. PAD CLAMP VALVE

This valve is used to control the flow of air for the pad clamping system. The system utilizes two (2) pad clamping cylinders to apply pressure to the eccentric cams located on top of the pad back up plate which in turn applies pressure to the pad and top of the feed bowl for efficient operation. Moving lever to **CLAMP** position (up) will activate the clamp system to **ON**, moving the lever to **RELEASE** position (down) will de-activate system to **OFF**.

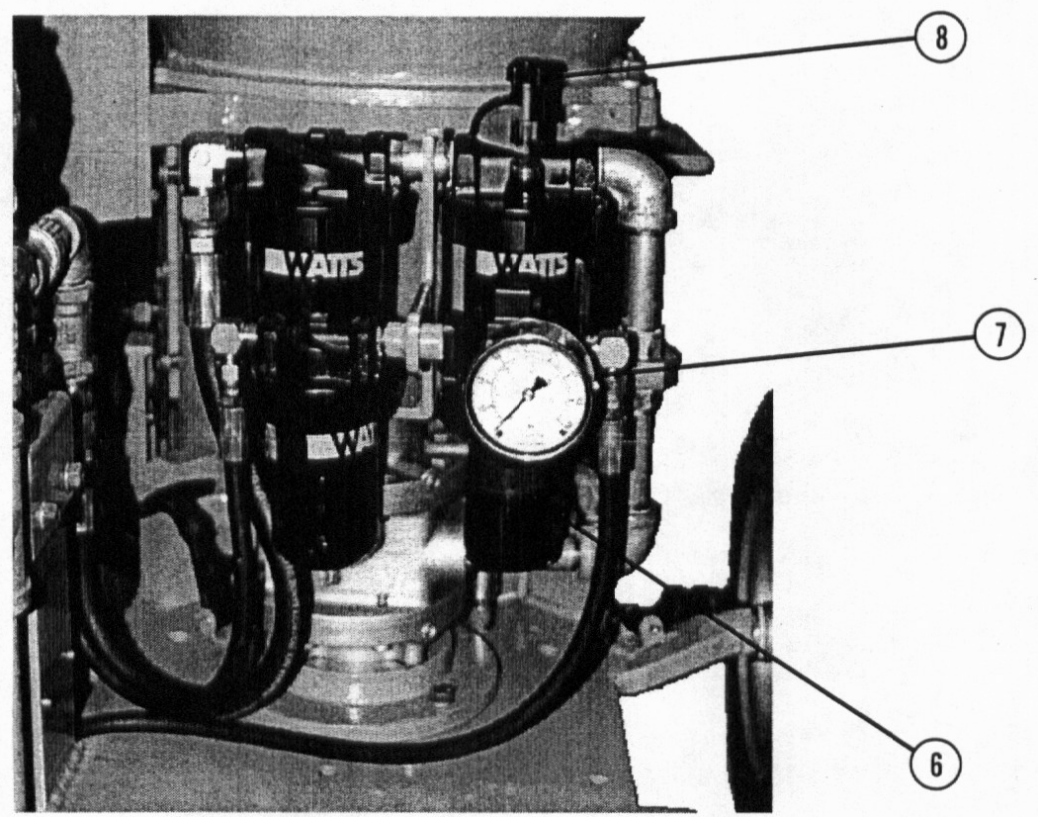

6. CLAMP AIR REGULATOR

Located under the air motor cover is an air filter and adjacent to this is the clamp air regulator. The regulator is used to enable the adjustment of the air pressure being applied to the clamping system. Before turning on the air with clamp valve, turn the adjusting knob counterclockwise until compression is released from the control spring. Turn on air and adjust regulator by turning knob clockwise to increase pressure. This regulator also has a lock in feature. After desired pressure setting has been made, push in on knob to lock up knob preventing it from accidentally turning. Knob can be unlocked by pulling out on knob.

7. PRESSURE GAUGE – 160 PSI (11.2 BAR)

This air pressure gauge is used to indicate the air pressure as set by the regulator for the pad clamp system.

8. LUBRICATOR

Located under the air motor cover is an air motor filter and air motor lubricator. The lubricator is equipped with a means to adjust the drip rate of oil into the air system. The top of the lubricator is equipped with the adjustment knob. Turn knob counterclockwise to **INCREASE** feed rate, clockwise to **DECREASE** feed rate. Adjust oil drip to two (2) drops per minute as a start. Drops are visible through the sight glass.

OPERATION INSTRUCTIONS

Having **READ** and **UNDERSTOOD** the previous pages on **SAFETY** and **CONTROL FAMILIARIZATION**, you are now in a position to learn how to operate the ***REED* MODEL *209***. If you have not read the previous pages, we suggest you do so before proceeding.

⚠ *C A U T I O N*

*For your own SAFETY and others around you, it is your **RESPONSIBILITY to insure the unit is in proper working condition. Check out the unit by using the PRE-OPERATION INSPECTION notes previously identified.***

⚠ *W A R N I N G*

OBSERVE ALL SAFETY PRECAUTIONS WHILE OPERATING THIS MACHINE.

SET UP AT JOB SITE

Your first and primary concern when arriving at the job site is to insure the machine can be safely operated and it will afford the maximum production efficiency without jeopardizing safety.

- The machine should be located on as level ground as is possible.
- Keep a sufficient distance away from slopes, pits, trenches, and excavations that could breakaway.
- After unit has been properly positioned at site, remove push around bar. If necessary, place blocks under stand to provide a firm footing on ground.

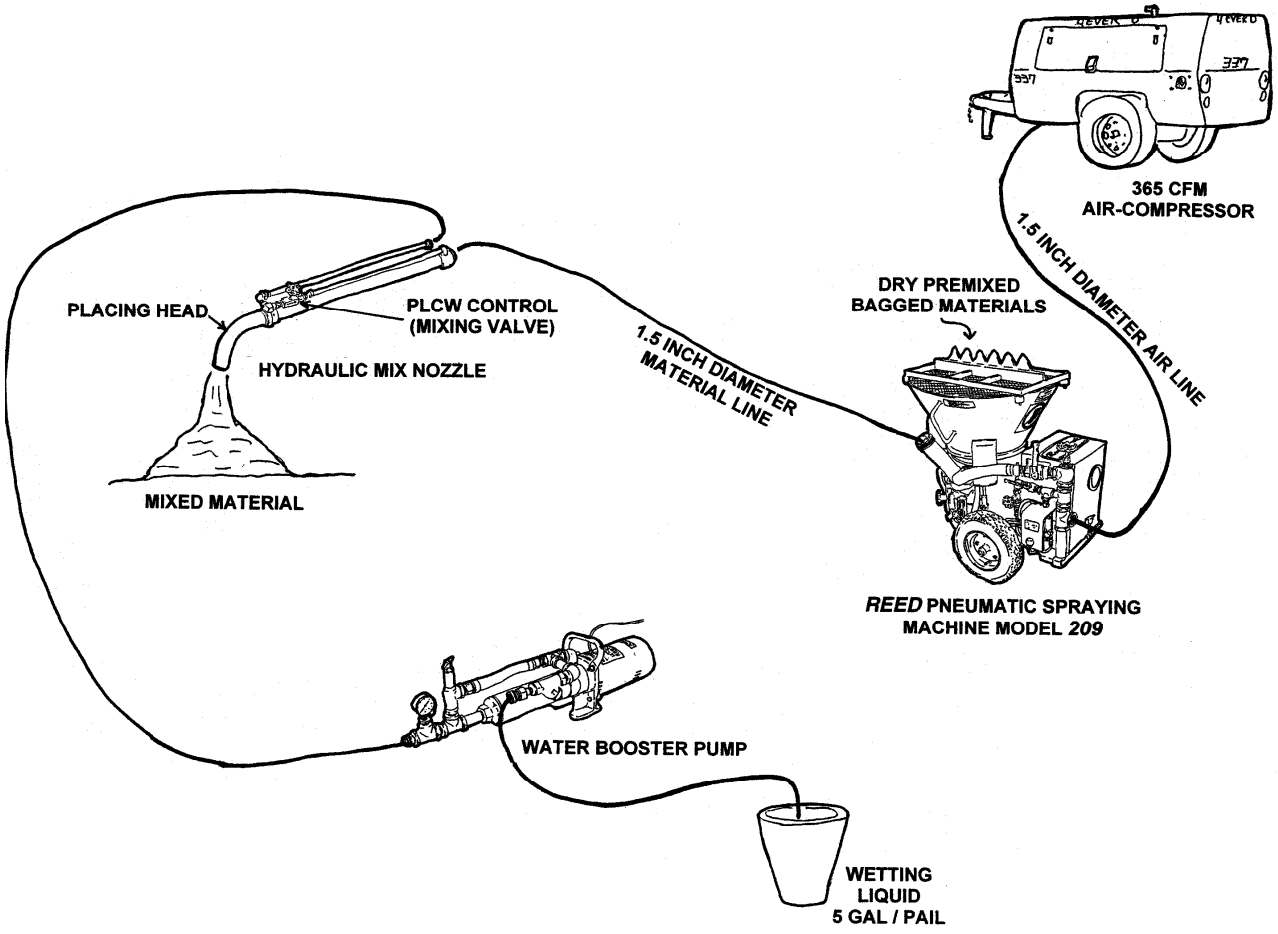

START-UP OF PUMP

- Check that all valves are in the "**OFF**" position.
- Connect the main source air line from compressor to inlet on manifold. The diameter of the air supply line should be at least equal to the diameter of the material conveying line. Make sure connection is tight and secure with safety chain or cable if required.
- Attach material hose to gooseneck and tighten.
- The nozzleman should install on the material hose the nozzle complete with water hook-up to its source.
- Turn pad clamping valve to **CLAMP** "**ON**" position. Adjust regulator to desired pressure setting. We recommend a pressure of 80PSI (56 Bar).

- Add material to the hopper and alert nozzleman that system is ready.
- On the signal from the nozzleman, **SLOWLY** turn on the main air valve to the material hose. Adjust throttle valve to desired air flow.
- The nozzleman will then slowly turn on the water at the nozzle.
- Fully open the main valve for the motor, then slowly open the air motor throttle valve.
- Material should now be flowing and nozzleman will then give the necessary signals for the desired air flow and material feed rate.
- Check the oil feed rate from the lubricator to the air motor. Adjust if necessary.
- As pumping continues, maintain a steady flow of material to the nozzle.

SHUT-DOWN OF MACHINE

It is important that the machine be shut down in the proper manner to eliminate the possibility of complications on restart.

- Stop the feed bowl rotation first. This is accomplished by shutting off **AIR MOTOR VALVE** without disturbing the throttle valve.
- Permit the air from the main line to continue to flow to the gooseneck and material hose until all material has been blown out. Shut off main air flow to system.
- Following this, the nozzleman may now shut-off the water at the nozzle.
- As water is being turned off, hold nozzle and point down toward the ground to prevent any water leakage from running back into the material hose.
- Shut down main source of air.

OPERATIONAL TROUBLESHOOTING TIPS

This Operational Troubleshooting Tips section is designed to assist you in recognizing the symptom, providing a probable cause and suggested corrective action. The items listed are based on logical symptoms from our experience as well as that of our users.

A) Symptom – Excessive Air Blowing Up and Out of Hopper

Corrective Action

- Check if pad clamp air valve is **OPEN**. If it is, adjust clamping regulator to increase pressure on pads.
- Inspect rubber sealing pad. It may need to be replaced.
- Check installation of rubber wear pad. Rubber portion is to be down against top of feed bowl.
- Feed bowl top may be worn and needs to be resurfaced or replaced.
- Check that agitator is securely tightened.
- Check that dust block is in proper position and no obstructions exist preventing dust from exhausting to dust bag.
- Check and empty, if necessary, dust can/dust bag assembly.

N O T E

If the above condition is allowed to continue without remedy, premature failure of the rubber pad or feed bowl will occur and as a result will create even more noticeable discharge of air back into the hopper or atmosphere. Do not confuse pocket exhaust with seal failure. Pocket exhaust is rhythmic puffing which should not cause material to be blown out of the hopper, but into dust collector.

B) Symptom – Insufficient Volume to the Nozzle

Corrective Action

- Pad not completely seated in the pad housing. Pad must be inserted far enough into pad housing to allow the inlet and outlet ports of the pad to align with the feed bowl pockets. When pads are removed, wear patterns should be regularly checked to assure the sealing portions of the rubber face are in alignment with the outer rim, the center divider and the inside hub portion of the feed bowl.

- Inadequate air supply or pressure

C) Symptom – Excess Material Leaking to the Ground from Around Feed Bowl on Lower Edge of Feed bowl Housing

Corrective Action

- Felt seal inside wheel housing is not pushed down close enough to the top of the feed bowl.
- Check condition of felt seal. It may be hard and dry from the lack of regular cleaning and oiling. Adjust felt pressure. See **ADJUSTMENT SECTION.**
- Replaces, and apply felt pressure belt

D) Symptom – Surging Material through the Hose and Nozzle.

Corrective Action

- Feed bowl spinning too fast resulting in too much material being discharged into material hose for the amount of air being used. Adjust RPM of feed bowl or increase air.
- Some pockets in the feed bowl may be plugged.
- The pockets in the feed bowl may be too large for the small diameter hoses.
- Material may have a high moisture content causing the material to bridge above feed bowl causing material to feed sporadically.
- Insufficient air supply
- Uneven feed rate maintained into the hopper by material loading system.

E) Symptom – Feed bowl Running Too Slow or Stops

Corrective Action

- Insufficient air supply to motor. Check material feed valve that it is fully opened. Check motor throttle valve.
- Check that compressor is of sufficient size for the intended operation.
- Check air filter at motor that it is not plugged.
- Check for possible obstruction in feed bowl.
- The air exhaust is restricting the air flow through the motor.
- Check the pressure on the pad clamp that it is not too tight.
- Vanes in air motor may be worn out. Never operate motor without the air filter or lubricator in proper working condition.

F) Symptom – Excess Rebound When Spraying

Corrective Action

- Using a poor nozzle spraying technique. Water to cement ratio is out of balance. Improper angle or distance to work face.
- Plugged water ring or water chamber in the nozzle assembly.
- Imbalance of sand, water, and cement ratio.
- Mixture too dry or wet
- Contamination of the mix and/or water.
- Excessive large aggregate, fiber, or wire mesh.

G) Symptom – Hose Blockage

Cause – Often the cause of hose blockage is the result of:

- Using oversize material
- Operating with an insufficient supply of air
- Feeding the hose too much material
- A prehydration of the material inside the hose
- Not clearing the hose after turning off material feed
- Sharp bends or kinks in the hose
- Improper coupling of hose ends
- Faulty hose (Liner separation from outer hose jacket.)

Corrective Action – Clearing a Hose Blockage
When a line blockage occurs, turn off air and start searching for the point of blockage beginning at the nozzle and working back toward the machine. The hose will continue to be soft from the nozzle to the point of blockage. When blockage has been found bend or pound on the hose at that point to free the blockage. Slowly turn on the air.

⚠ W A R N I N G

Exercise EXTREME CARE when attempting to blow the material clear using air. ALWAYS have the nozzle end securely held and have a person at the machine who will be ready to cut back on the air if and when required.

H) Symptom – Insufficient compressed air

Corrective Action – How Much Air is Enough?

Most problems occurring on the average gunning jobs are the result of improper application of air or insufficient amount of air.

- Make sure the compressor is of adequate size, is properly adjusted and capable of producing maximum capacity.
- Multiple compressors may be used to gain the required volume of air. In this situation, the compressors should be arranged so that they discharge into a certified central air receiver. From this a single air line of proper size can then be run from receiver to machine.
- Always supply the machine with the same size air supply hose as the material hose being used for gunning. Multiple small hoses often do not have the carrying capacity of a single larger hose.
- Make sure all valves are open between the air source and machine. Check that supply line is free of kinks or blockages.
- Run material hoses from the machine to the nozzle in as straight a line as is possible. This will improve the flow characteristics and reduce wear.
- Exercise caution when coupling hoses that no foreign objects are present or restrictions at point of connection.
- Always use good premium hose specially manufactured for gunning applications.
- The amount of air flow being received can be tested for proper volume as follows when flow meter or orifice testers are not available:
    - With hopper empty of material and having the pad loosely clamped, open main air valve to full open position.
    - Open the air motor main valve and the throttle valve to full open.
    - The air motor should reach full RPM without hesitation. If air motor does not come to full RPM, the air supply to the machine is marginal. This condition could result in a marked decrease in the volume of material introduced into the air stream within the machine and out of the material hose.

CLEAN UP OF THE MACHINE

This sometimes may seem tedious, tiresome, and a distasteful task, however, the clean up is a **VERY IMPORTANT** operation. We pointed out previously the importance of the pre-operation inspection. The clean up is no different because it sets the stage as to how well the machine will perform the next time it is used. The machine should be thoroughly cleaned after each day's use. The following is a suggested procedure:

- Remove the dust hose and dust bag prior to wash down.

- With a water hose, wash down the inside of the hopper to remove any material residue.
- Turn **MATERIAL FEED VALVE** to **ON** position.
- Turn on **AIR MOTOR VALVE** to **ON** position and throttle down the air so that feed bowl very slowly rotates to enable the air to blow out the water and material.
- Turn **OFF** air to feed valve and motor.
- Disconnect the material feed hose at the gooseneck.
- Remove hand knobs and "C" brackets holding on the pad clamp. Swing out the semi-circular clamp bracket.
- Remove gooseneck with pad back-up plate.
- Remove the hopper screen and agitator. Note that the agitator contains left-hand threads. To remove turn agitator **CLOCKWISE**.
- Remove hopper mounting bolts then lift off hopper.
- To remove feed wheel housing, step down on kick bar which causes the housing to rotate counterclockwise until it clears locking lugs.
- The feed bowl is completely exposed along with other parts for removal and cleaning.
- Clean all parts thoroughly paying particular attention to spindle, bottom surface of feed bowl, riser plates, etc.

After thoroughly cleaning machine, reassemble parts and install hopper and screen.

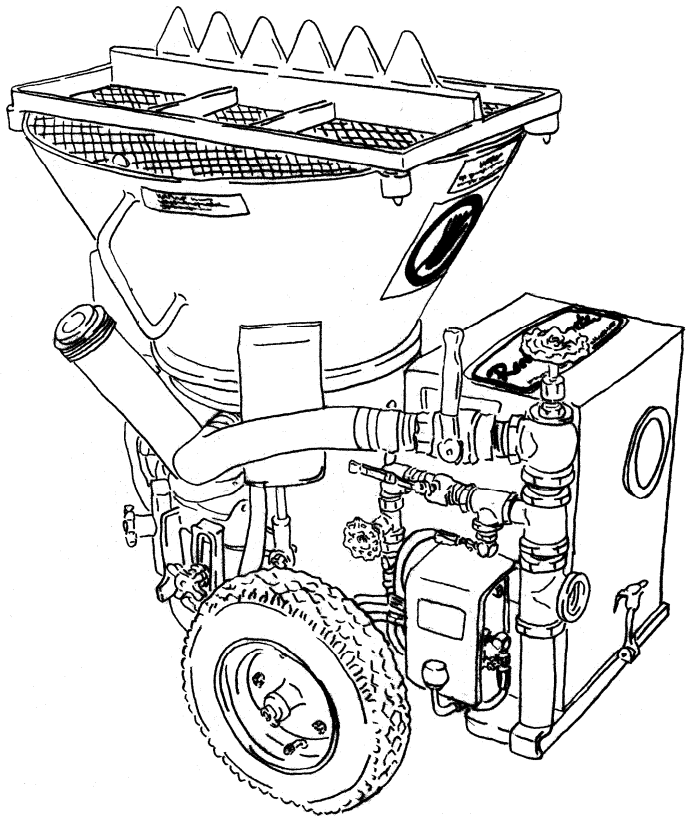

PREVENTATIVE MAINTENANCE

How good is any of the equipment you own? It is only as good as it is **MAINTAINED**. Even the finest equipment manufactured requires attention and care. The ***REED*** **MODEL *209 DRY MIX* PNEUMATIC SPRAYING MACHINE** is no different. A good well planned and carried out preventative maintenance program will enhance a properly operating unit as well as the safety of those operating and using the equipment.

It is very important to establish a good maintenance program. Costly repairs and loss of revenue can often be avoided by planning ahead, setting a regular schedule and exercising good preventative maintenance techniques.

N O T E

All points noted herein regarding the maintenance and checks are not intended to replace any local or regional regulations which may pertain to this type of equipment. It should also be noted that the list and schedule is not considered to be inclusive.

⚠ *C A U T I O N*

It is your responsibility to always insure that the applicable safety precautions are strictly observed when performing the inspections and maintenance checks. Make certain any components that are found to be defective are replaced or those in need of adjustment or repair are correct before operating the machine.

SCHEDULED INSPECTION

The main purpose of accomplishing scheduled inspections is to identify and detect any potential malfunction before it can expand into a major problem. In so doing, it will help ensure a good safe unit performance.

1. FRAME AND RELATED COMPONENTS

- Frame integrity, visually check welds for cracks
- Rear Wheel mounting, spindle nut tight
- Motor housing and latches in good condition.

2. HOPPER

- Visually check for structural damage, cracked welds
- Check condition of screen, attaching hardware
- Dust bag empty, good condition
- Check condition of agitator, structural damage
- Check hopper mounting bolts

3. MAIN OPERATING PARTS

- Inspect feed bowl for damage
- Check feed bowl top for excessive wear
- Wear pad fits properly, installed properly, good seal
- Visually check gooseneck, mounting, connection
- Check pad clamping cylinders, cam rollers for damage.
- Inspect felt seal and replace if necessary.
- Check horizontal pad clamp and rubber seal

4. AIR MOTOR AND GEAR CASE

- Check oil level in gear case
- Air motor mounting secure
- Connections to motor are tight
- Check condition of air filter
- Check condition of air motor lubricator, lube level

5. CONTROLS AND INSTRUMENTS

- Pressure gauge is in good condition, operative
- Valves open or close easily
- Clamping regulator good condition
- All piping and hose connections are secure and tight

GENERAL MAINTENANCE AND SERVICE

The ***REED*** **MODEL** ***209*** is equipped with several components that because of the application require frequent attention. Rapid wear and probable component breakdown will result if the unit is operated with inadequate service.

FILTER – AIR MOTOR

Located under the housing and installed in the air line of the motor is an air filter. The purpose of this component is to remove any liquid and solid particles for the air stream that could damage the air motor.

In operation, the air entering the filter is guided into a swirling pattern by the louvers. The liquid and coarse particles are thrown against the wall of the bowl by centrifugal force and run down to the bottom of the bowl. A baffle creates a quiet zone at the bottom of the bowl to prevent air turbulence from re-entraining separated liquids into the air stream. Air leaving the bowl passes through the element where finer solid particles are removed and retained.

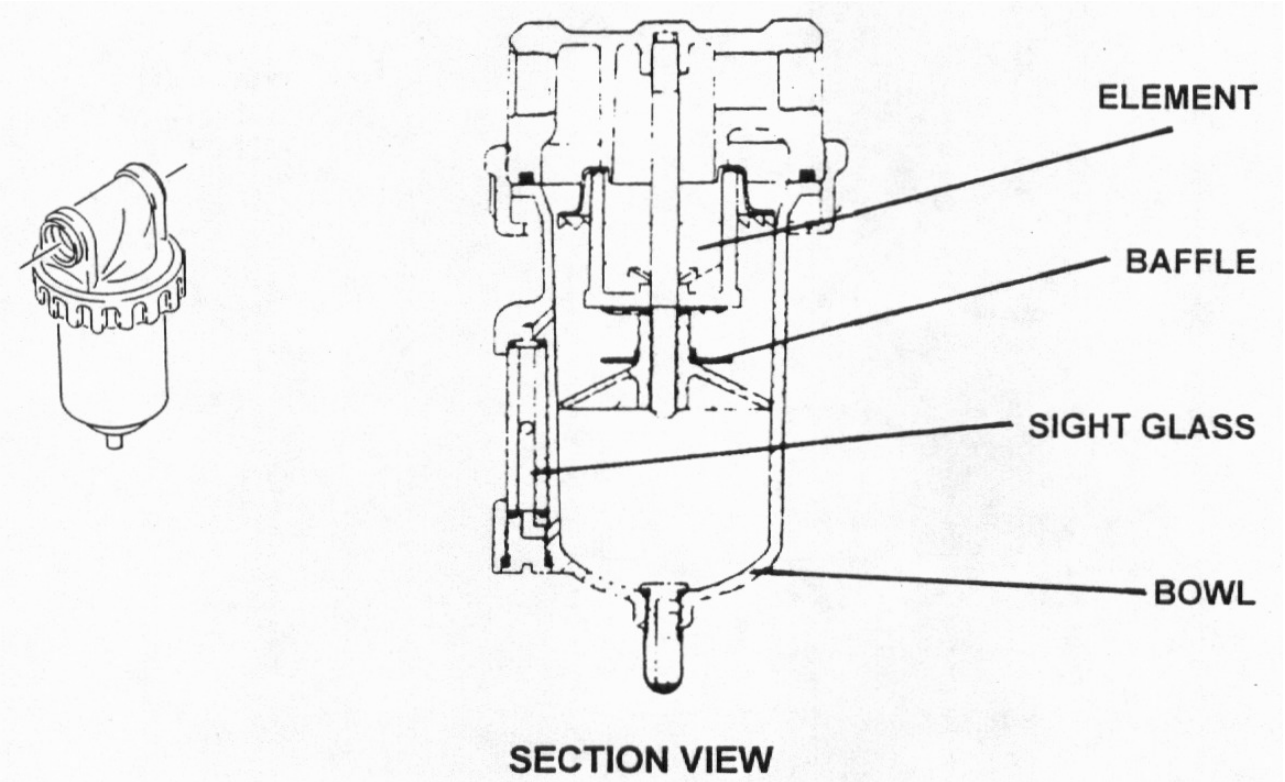

SECTION VIEW

Filter should be cleaned and serviced when sufficient solids and liquids are present inside bowl. To service the filter, shut off the air pressure going to the motor. Filter can be serviced without removal from the air line. Disassemble filter by unscrewing bowl, being careful of gasket. Clean all parts except plastic bowl and/or sight glass with alcohol. Blow out filter body before reassembly. Wash filter element in alcohol and blow out from the inside. Plastic bowl with sight glass must be cleaned using household soap only. Reassemble filter components.

AIR MOTOR LUBRICATOR

Located adjacent to the air motor filter is the air motor lubricator. The purpose of this component is to inject in the air stream a type of lubricant that will keep the air motor moving parts lubricated for prolonged service life. The amount of lubricant entering the air stream is adjustable.

The lubricator is equipped with a “Dial Set” knob, that when turned to zero, no oil is delivered to the venturi thus the air motor is not being lubricated. To adjust the oil drip rate, turn on the air, start the flow and set knob to obtain the desired drip rate which is visible through the sight glass. Clockwise rotation of the knob decreases oil feed rate.

Lubricant – Use SAE# 10 (S.U.V. 150-200 SEC)
Drip Rate – Two-Three drops per minute for average condition. A heavy film at or near motor exhaust indicates over lubrication. Lower drip rate.

Fill the lubricator by slowly removing fill plug and fill to approximately ¼” from top of bowl. Replace fill plug.

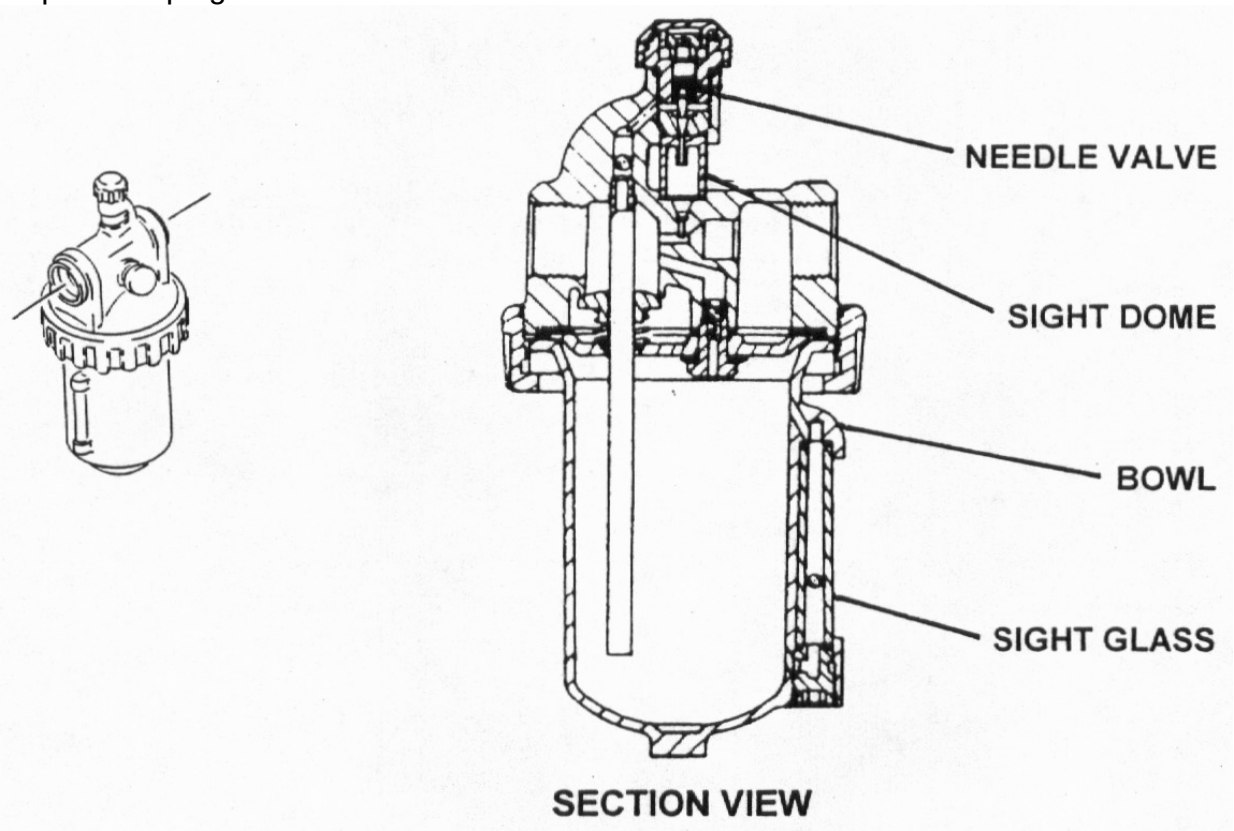

It may be necessary to periodically clean the lubricator. A good indication is when the oil stops dripping through the sight glass even when the knob is on. It is not necessary to remove lubricator from the line for cleaning. In most situations, cleaning is needed only in the oil metering area. This is accomplished by:

- Pulling off adjusting knob. Remove needle valve assembly by turning out large hex nut.
- Remove needle valve seat and clean removed parts with alcohol. Make sure hole in seat is clear.
- Use a #57 drill bit and manually check that hole in bottom of sight glass is open.
- Blow out lubricator body with compressed air before reassembly.
- If necessary, clean the plastic bowl with sight glass using household soap only.
- Reassemble the parts and reset drip rate.

GEAR CASE

Under and part of the baseplate is a transmission or gear case used to transmit the power from the air motor to the feed bowl for its rotation. The gears are lubricated by running continuously in oil. Based on this, it is important that the level in the gear case be maintained to its proper level. The gear case should be kept at least one-half (1/2) full.

Interval – Check level once a month, sooner if above average usage occurs.
Lubricant – Shell 90 weight gear oil or equal

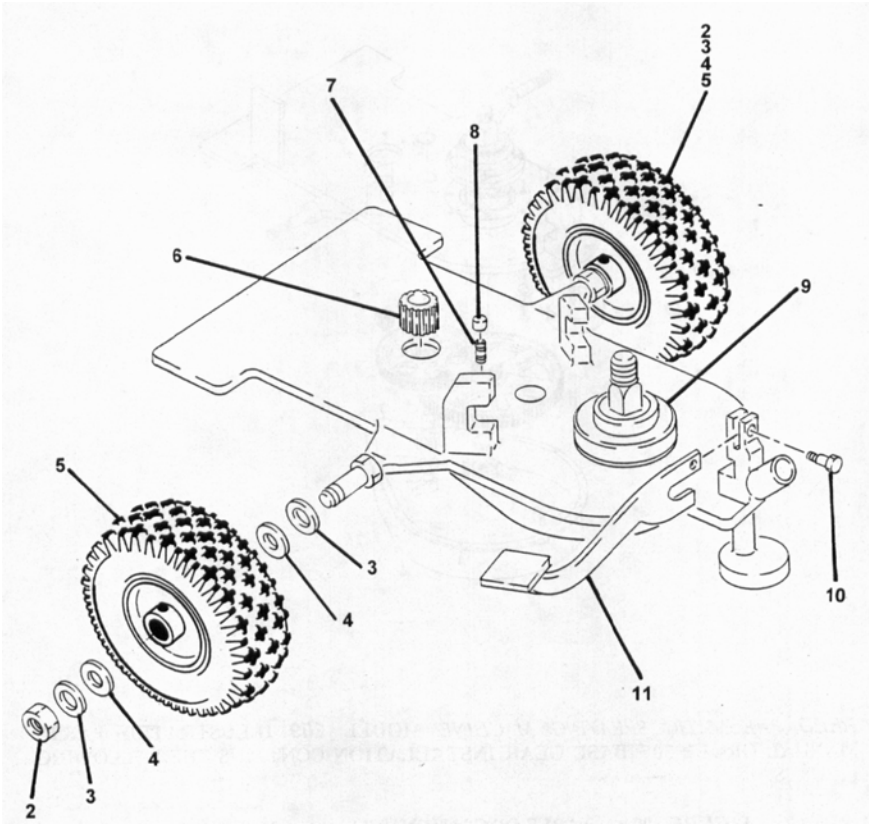

Remove motor cover housing making gear case vent cap accessible. Remove vent cap and check level. Add oil if required. Replace vent cap.

AUTOMATIC PAD CLAMP SYSTEM

The clamp system of the pads utilizes several components that require periodic service attention to maintain efficient operation. These are as follows:

Air Filter – This is similar to the filter used on the air motor, but on a smaller scale. It is important that any accumulation of liquid be drained off before it reaches the level of the lower baffle. This can be accomplished by opening drain cock periodically. If excessive pressure drop occurs this is an indication that cleaning is necessary.

Regulator – This component is used to enable the adjustment of the air pressure applied to clamping the pads. To service the regulator, the following is offered:

- Shut off air supply and exhaust the primary and secondary pressure before disassembling the regulator.
- Disengage the adjusting knob by pulling out.
- Turn adjusting knob counterclockwise until the compression is released from the pressure control spring.
- Unscrew the threaded collar and remove the bonnet assembly.
- Disassemble the unit, clean and carefully inspect parts for wear and/or damage.
- Place a small amount of lubricant grease on o-ring and lip seal. Install diaphragm assembly into bonnet and assemble to the body.
- Tighten threaded collar to 28-32 in lbs.

NOTE

Use only mineral based oil/grease or silicone grease to lubricate parts. DO NOT USE Synthetic oils or greases.

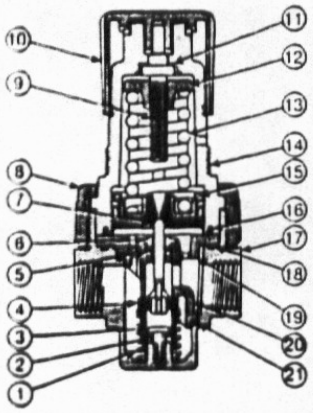

1	Poppet Return Spring
2	Lip Seal - poppet assembly to cap
3	Retainer (06R & 07R)
4	Poppet Assembly
5	Seal - poppet assembly to body
6	Retainer - for lip seal
7	Vent Seal - lower plate (06R & 07R) or piston (08R) to poppet assembly
8	Collar (06R & 07R)
9	Adjusting Screw (06R & 07R) or Adjusting Screw Assembly (08R)
10	Knob
11	Washer
12	Spring Guide (08R) or Spring Guide & Nut Assembly (06R & 07R) - for control spring
13	Control Spring
14	Bonnet
15	Plate (06R & 07R) - above diaphragm
16	Diaphragm (06R & 07R)
17	Body
18	O-ring (06R & 07R)
19	Plate (06R & 07R) - below diaphragm
20	Insert (06R & 07R)
21	O-ring (06R & 07R)

Clamping Cylinders – The length of stroke required for proper pad clamping has been set at the factory and should not be altered unless it is necessary to replace any of the components. When this becomes necessary, it is suggested that a measurement be taken of the exposed rod when cylinder is actuated for extension.

ADJUSTMENTS

In the coarse of using the machine as well as in cleaning, operation, and maintaining, periodic adjustments may be required to continue the factory type performance. The following is offered to assist in accomplished these functions.

RISER PLATE INSTALLATION

The top surface of the feed bowl is a wear surface which will need to eventually be reground for continued use or replaced totally. As the top surface wears or is resurfaced, the feed bowl needs to be raised to minimize the space and once again provide a good seal.

To raise the bowl, riser plates can be installed underneath the bowl. At the delivery of each machine, a set of three (3) plates, each of a different thickness, thick, medium, and thin are furnished. The plates are double dish blanchard ground parts and may be used in any combination required to elevate the feed bowl to the proper position. Do no substitute with anything less than those furnished by ***REED.***

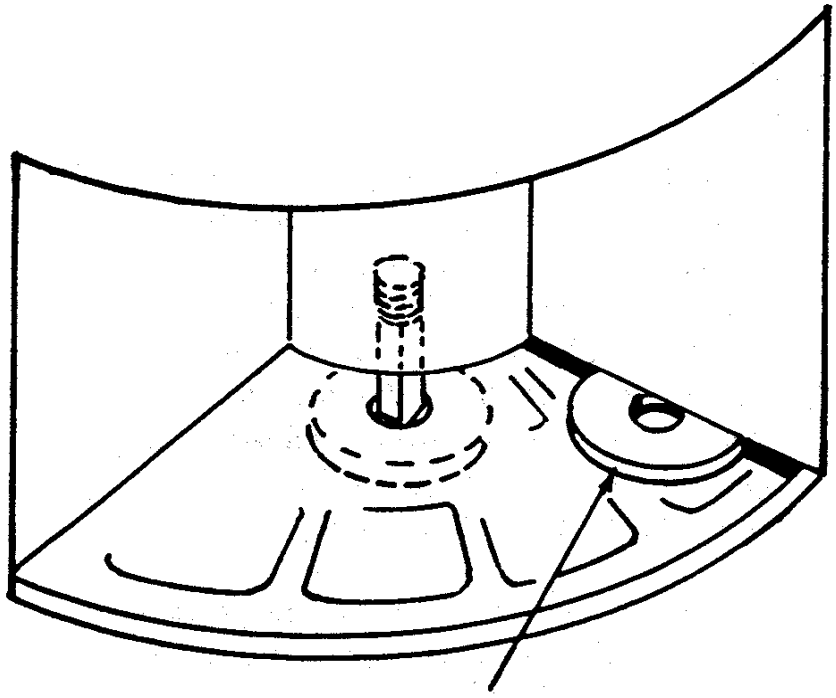

FOR CHECKING ONLY, IF RISER PLATE SLIDES IN HERE, RISER PLATE SHOULD BE PLACED UNDER FEED BOWL.

To determine the required riser, insert one of the plates, thick or thin, between the pad housing and the top surface of the feed bowl. After making this check, proceed to install the same thickness of riser under the feed bowl. Feed bowl should be up, as close to housing as possible but not in contact with housing.

N O T E

When a machine has been in use for a period of time, riser plates may have already been installed. These are often difficult to see on the spindle shaft. To dislodge the existing riser plate from the spindle hub, tap lightly around the outer diameter of the hub with a soft faced hammer or mallet until separation of the plates occurs.

FELT SEAL

Inside the feed bowl housing is a felt seal ring that is used to retain the felt seal in position. The purpose of this felt seal is to prevent material from blowing out of the bottom of the housing assembly. Before installing felt seal, lubricate the seal with oil then install in ring and adjust felt pressure by push down with crescent wrench or screw driver.

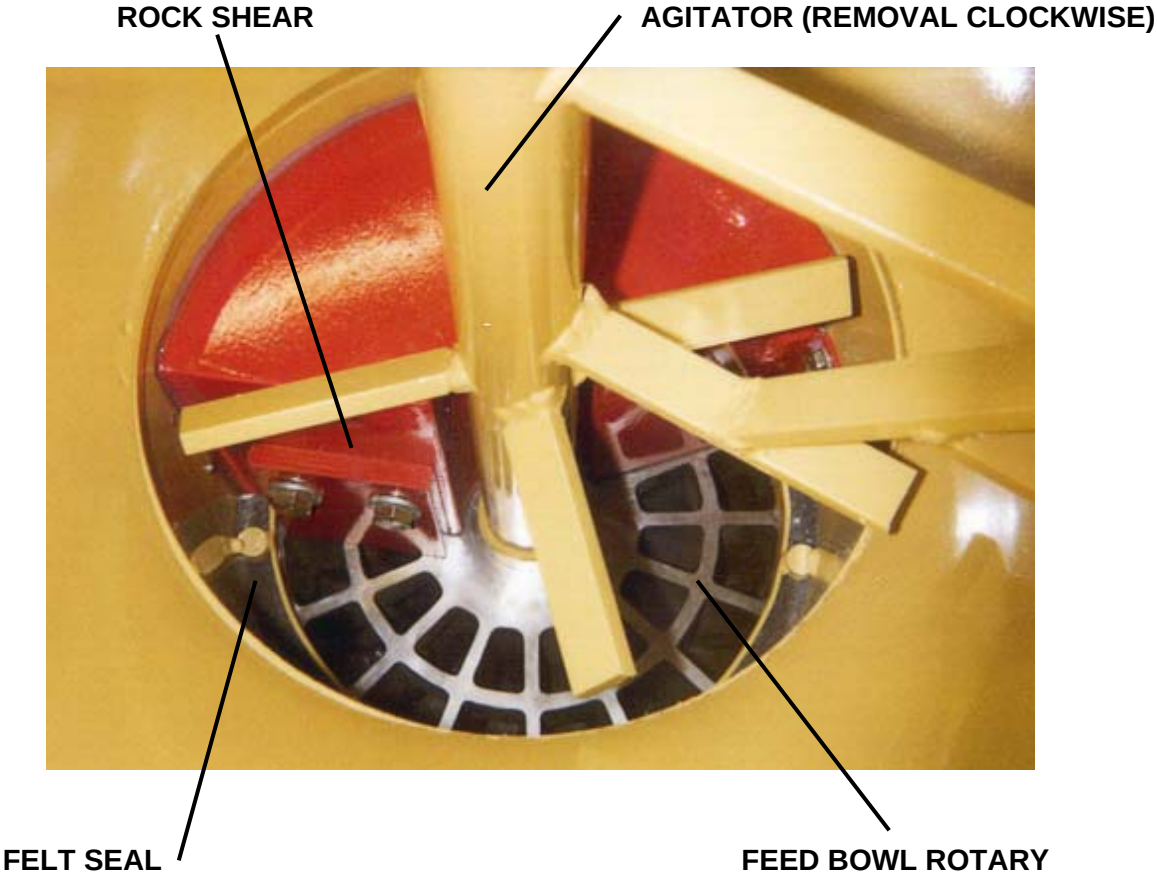

ROCK SHEAR

Installed on the top side of the feed bowl is a rock shear. The purpose of the rock shear is to act as a wiper in keeping large aggregate from being lodged between the wheel and the rubber pad thus providing increased life of the pad.

The rock shear is adjustable and should be positioned as close as possible to the top of the wheel without allowing to scrape directly on the bowl. A common practice is to use a business card as a gauge, placing it between the rock shear and the feed bowl. Then tighten bolts starting with the lower bolts first.

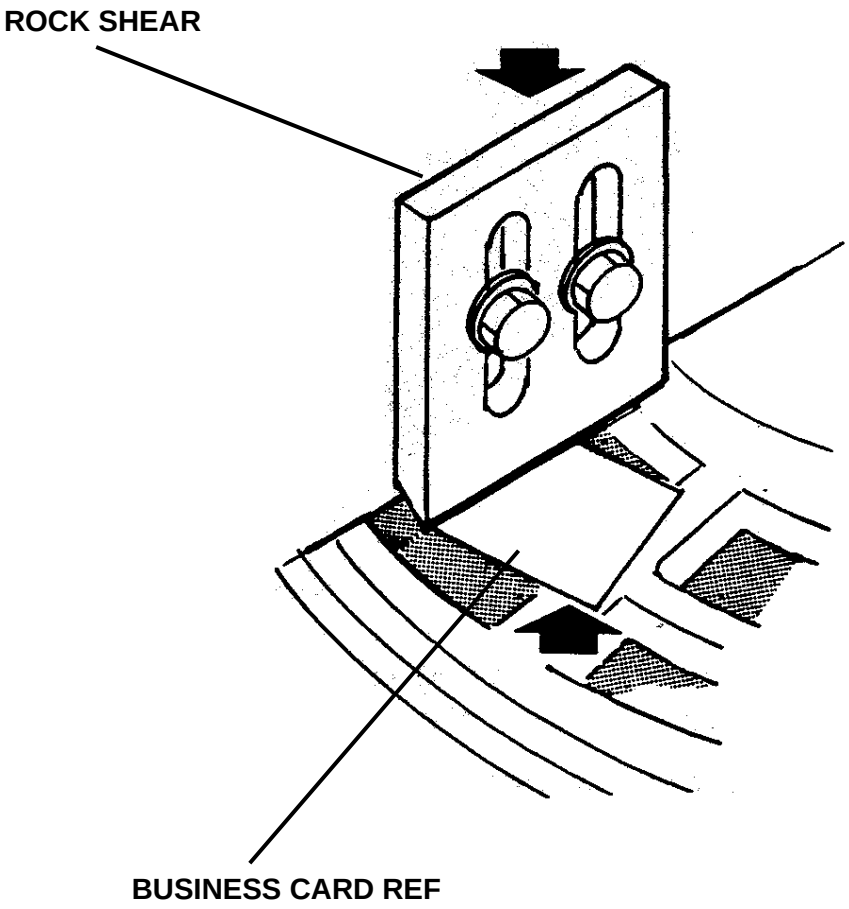

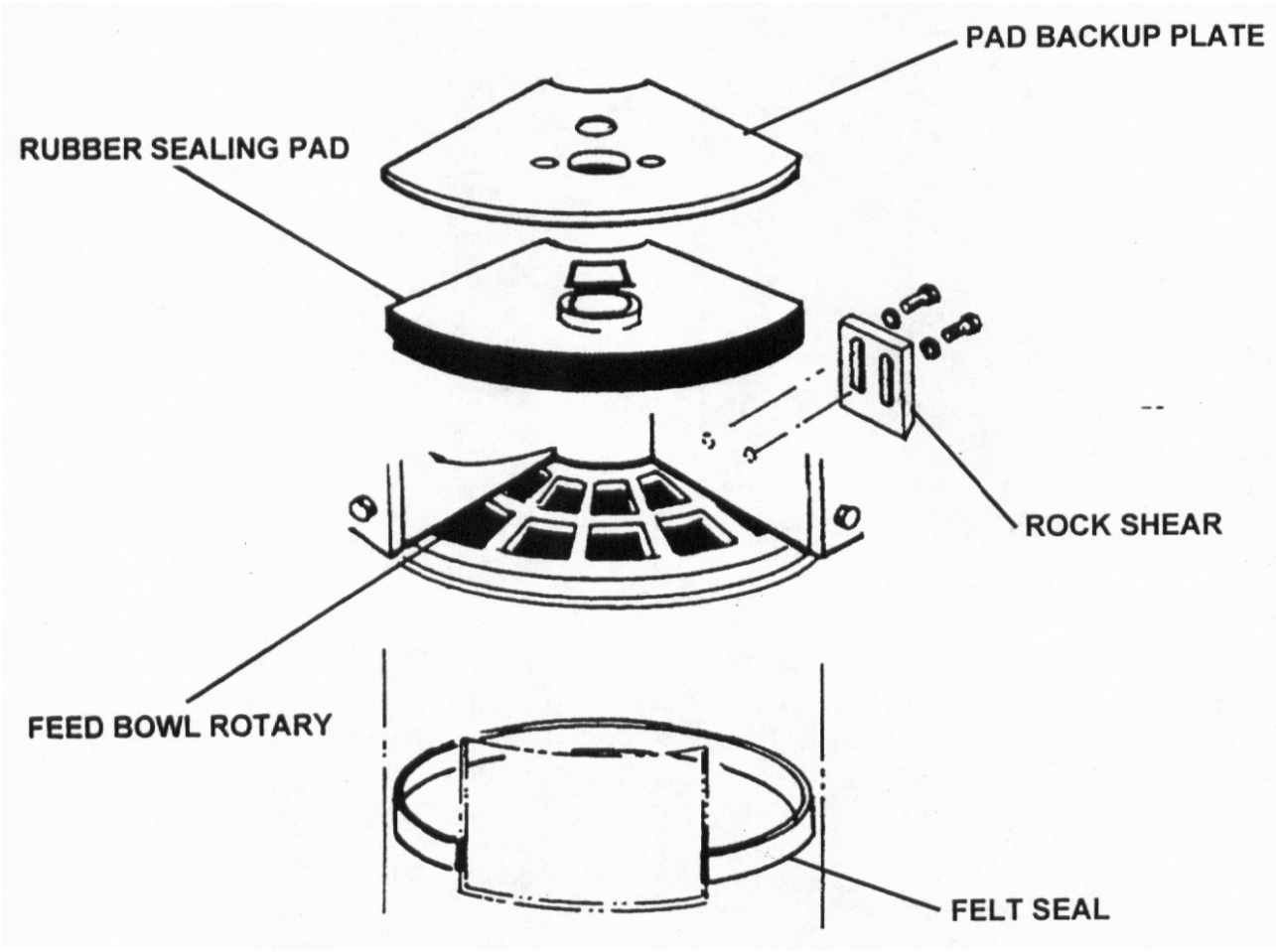

RUBBER SEALING PAD

This component is a major ingredient in the operation of the machine. It is used to seal off all the pockets loaded with material, except for one, allowing the air to be directed to the intake opening of the feed bowl and exhausting the material air mixture through the outlet and into the gooseneck. It is a seal, thus the match up of the rubber pad to the back up plate is crucial.

- Make sure the inlet and outlet openings of the rubber pad match the openings of the feed bowl.

- The rubber flange ring on top of the pad must fit snugly into the corresponding round hole in the back up plate.

- Make sure that the inlet pipe or nipple attached to the threaded hole in the back up plate is not protruding beyond the underside of the plate (threaded in too far). If nipple protrudes beyond the under surface, it will prevent the sealing pad from mating flat with the back up plate.

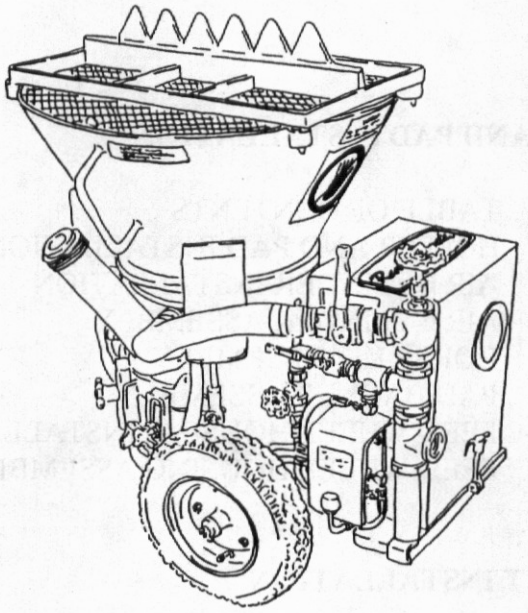

REED *PNEUMATIC SPRAYING MACHINE* **MODEL *209* ILLUSTRATED PARTS MANUAL** CONTAINS THE FOLLOWING GROUPS AND FIGURES:

GROUP 00 HOW TO USE PARTS MANUAL

FIGURE 00 TABLE OF CONTENTS
FIGURE 01 HOW TO USE PARTS MANUAL
FIGURE 02 HOW TO ORDER PARTS

GROUP 10 FINAL INSTALLATION

FIGURE 00 TABLE OF CONTENTS
FIGURE 01 FINAL INSTALLATION
FIGURE 02 DECAL ASSEMBLY

GROUP 30 BASE GEAR INSTALLATION

FIGURE 00 TABLE OF CONTENTS
FIGURE 01 BASE INSTALLATION
FIGURE 02 BASE GEAR ASSEMBLY
FIGURE 03 DRIVE SPINDLE ASSEMBLY

GROUP 40 HOPPER AND PAD INSTALLATION

FIGURE 00	TABLE OF CONTENTS
FIGURE 01	HOPPER AND PAD INSTALLATION
FIGURE 02	AIR CYLINDER INSTALLATION
FIGURE 03	AIR CYLINDER ASSEMBLY
FIGURE 04	HORSE KIT ASSEMBLY
FIGURE 05	PAD BACKUP ASSEMBLY
FIGURE 06	FEED WHEEL HOUSING INSTALLATION
FIGURE 07	FEED WHEEL HOUSING ASSEMBLY

GROUP 50 AIR INLET INSTALLATION

FIGURE 00	TABLE OF CONTENTS
FIGURE 01	AIR INLET INSTALLATION
FIGURE 02	AIR MOTOR AND VALVE ASSEMBLY
FIGURE 03	AIR MOTOR ASSEMBLY
FIGURE 04	LUBRICATOR AND FILTER SUB-ASSEMBLY
FIGURE 05	AIR MOTOR LUBRICATOR ASSEMBLY
FIGURE 06	AIR INLET SUB-ASSEMBLY

GROUP 60 ACCESSORIES INSTALLATION

FIGURE 01	ACCESSORIES INSTALLATION
FIGURE 02	DUSTBAG ASSEMBLY

GROUP 70 OPTIONAL INSTALLATION

FIGURE 00	TABLE OF CONTENTS
FIGURE 01	OPTIONAL INSTALLATION
FIGURE 02	1.5 INCH COARSE THREAD PAD BACKUP ASSEMBLY
FIGURE 03	1.25 INCH COARSE THREAD PAD BACKUP ASSEMBLY

I. PURPOSE

This parts manual is prepared, issued and / or revised by ***REED***, for the exclusive use of its customers and is intended for use in provisioning, requisitioning, storing and issuing replaceable ***REED*** Model ***209*** Pneumatic Spraying machine.

The contents are proprietary to ***REED*** and are subject to change without notice. The use of any part of this document by any other person or persons or for any other purpose without the written consent of ***REED*** is expressly prohibited. In addition, ***REED*** expressly disclaims any and all responsibility arising in or any way related to such ***REED***'S prior written consent thereto.

The parts number content of this document, arrangement and breakdown sequence of items is compatible with Military Standard (**MS**) and Air Transport Association Specification (**ATA**).

II. GENERAL SYSTEM OF ASSEMBLY ORDER - Detailed Parts List (Refer to Next Page)

1. This area refers to the corresponding illustration

   GROUP - FIGURE - PAGE

   A. GROUP should be divided with:

00	MODEL ***209*** ILLUSTRATED PARTS MANUAL
10	FINAL INSTALLATION
30	BASE GEAR INSTALLATION
40	HOPPER AND PAD INSTALLATION
50	AIR INLET AND VALVE INSTALLATION
60	ACCESSORIES INSTALLATION
70	OPTIONAL INSTALLATION

   B. FIGURE belongs to the group. Please see page of contents and each group.

   C. PAGE numbers follow to the right of each figure number.

2. The **ITEM NUMBER** corresponds to the item number shown for the part in illustration. Parts with item number proceeded by a dash (such as: -1, -5, -12 etc.) are not illustrated.

3. **PARTS NUMBERS** that carry a ***REED*** part number.

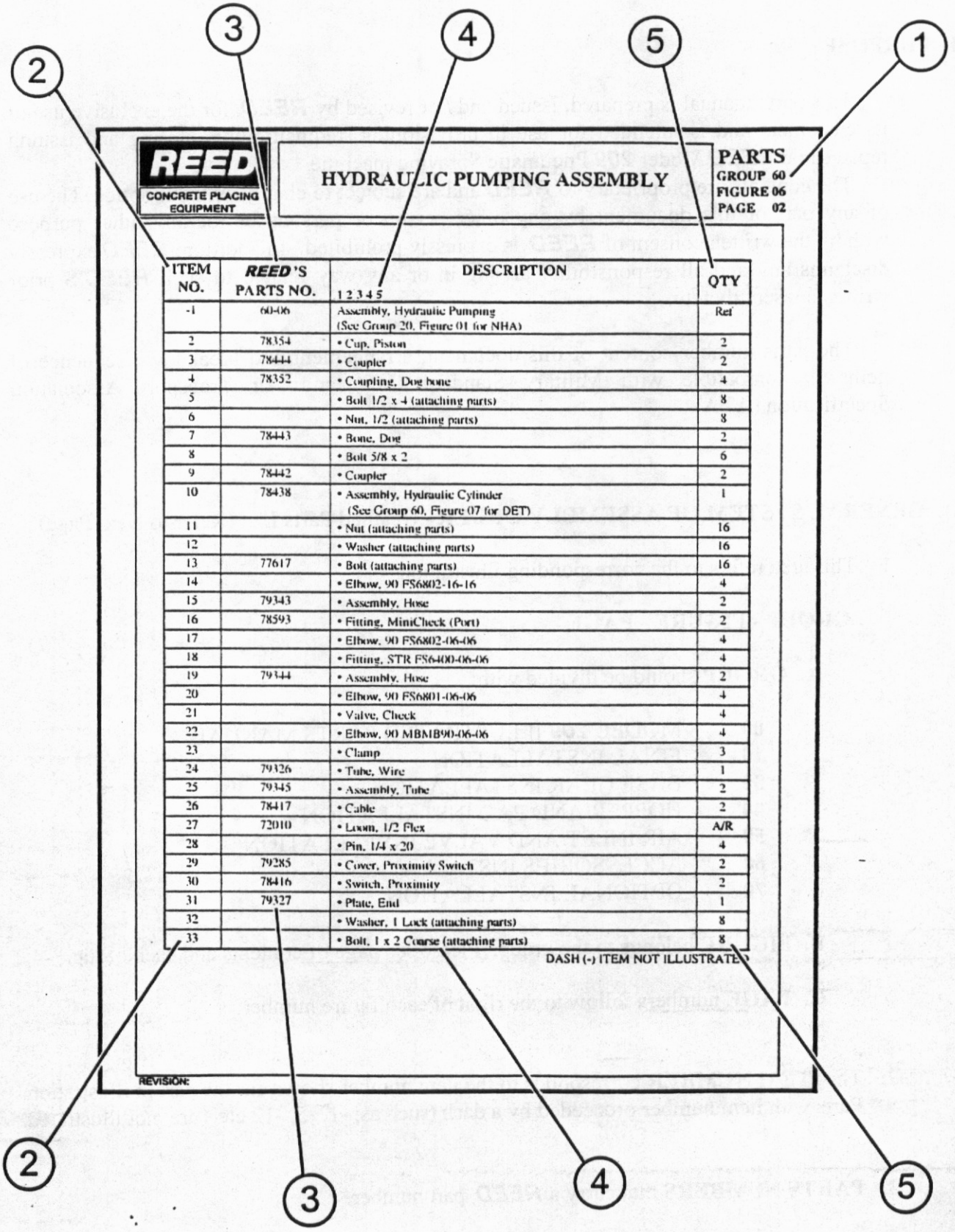
2
3
4
5
1
REED
CONCRETE PLACING EQUIPMENT
HYDRAULIC PUMPING ASSEMBLY
PARTS
GROUP 60
FIGURE 06
PAGE 02
ITEM NO.
REED'S PARTS NO.
DESCRIPTION
1 2 3 4 5
QTY
-1 60-06 Assembly, Hydraulic Pumping (See Group 20, Figure 01 for NHA) Ref
2 78354 • Cup, Piston 2
3 78444 • Coupler 2
4 78352 • Coupling, Dog bone 4
5 • Bolt 1/2 x 4 (attaching parts) 8
6 • Nut, 1/2 (attaching parts) 8
7 78443 • Bone, Dog 2
8 • Bolt 5/8 x 2 6
9 78442 • Coupler 2
10 78438 • Assembly, Hydraulic Cylinder (See Group 60, Figure 07 for DET) 1
11 • Nut (attaching parts) 16
12 • Washer (attaching parts) 16
13 77617 • Bolt (attaching parts) 16
14 • Elbow, 90 FS6802-16-16 4
15 79343 • Assembly, Hose 2
16 78593 • Fitting, MiniCheck (Port) 2
17 • Elbow, 90 FS6802-06-06 4
18 • Fitting, STR FS6400-06-06 4
19 79344 • Assembly, Hose 2
20 • Elbow, 90 FS6801-06-06 4
21 • Valve, Check 4
22 • Elbow, 90 MBMB90-06-06 4
23 • Clamp 3
24 79326 • Tube, Wire 1
25 79345 • Assembly, Tube 2
26 78417 • Cable 2
27 72010 • Loom, 1/2 Flex A/R
28 • Pin, 1/4 x 20 4
29 79285 • Cover, Proximity Switch 2
30 78416 • Switch, Proximity 2
31 79327 • Plate, End 1
32 • Washer, 1 Lock (attaching parts) 8
33 • Bolt, 1 x 2 Coarse (attaching parts) 8
DASH (-) ITEM NOT ILLUSTRATED
REVISION:
2
3
4
5

4. DESCRIPTION

A. The **INDENTURE SYSTEM** used in the parts list shows the relationship of one part to another. For a given item, the number of indentures depicts the relationship of the item to the components of the item as follows:

1 2 3 4 5
Assembly (or Installation)
- Detail part of assembly
- Sub-assembly
- Attaching parts for sub-assembly
- • Detail part of sub-assembly
- • Sub-sub-assembly
- • Attaching parts for sub-sub-assembly
- • • Detail part of sub-sub-assembly
- • • Sub-sub-sub-assembly
- • • Attaching parts of sub-sub-sub-assembly
- • • • Detail part of sub-sub-sub-assembly

B. "See Group 20, Figure 01 For **NHA**"
Identifies the illustrated parts chapter location; indicates where the Next Higher Assembly (**NHA**) of the item shown.

C. "See Group 60, Figure 07 For **DET**"
Identifies the illustrated parts chapter location; indicates where the item and its Detailed Breakdown (**DET**) is shown.

D. "See Group 30, Figure 05 for **REF**" or "See Vendor Chapter for **REF**"
Identifies the illustrated parts chapter where the part is, and if listed and illustrated in Vendor Chapter. It is used as a cross-reference (**REF**).

5. QUANTITY

A. Reference (**REF**) indicates the items that is listed previously in the Next Higher Assembly (**NHA**) and then again in this figure.

B. As Required (**A/R**) indicates the parts that is used in a quantity as required.

C. A number entry indicates the quantity of the part used in its next higher application.

6. Functionally related assemblies are illustrated in phantom(——— – – ———) but not listed on the detail parts list page.

1. Always give serial number of *PNEUMATIC SPRAYING MACHINE* **MODEL *209*** (Refer to each unit nameplate shown below). NOTE: This manual is being released to cover unit starting with serial number **893466-209AR** to current production. Some components used on earlier units differ from current productions. Where this occurs, the part is identified by a serial number.

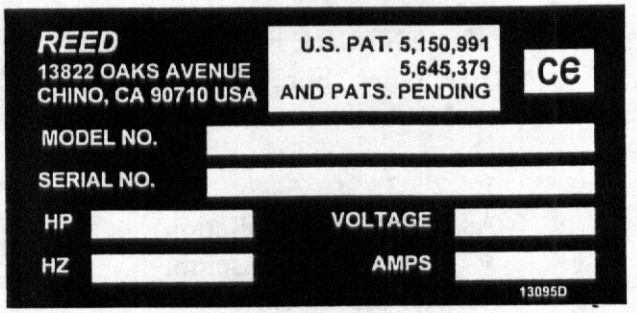

2. Always specify part number and complete name of parts ordered.

   A. Turn to table of content in the desired Installation. Refer to main group in which part should be listed.

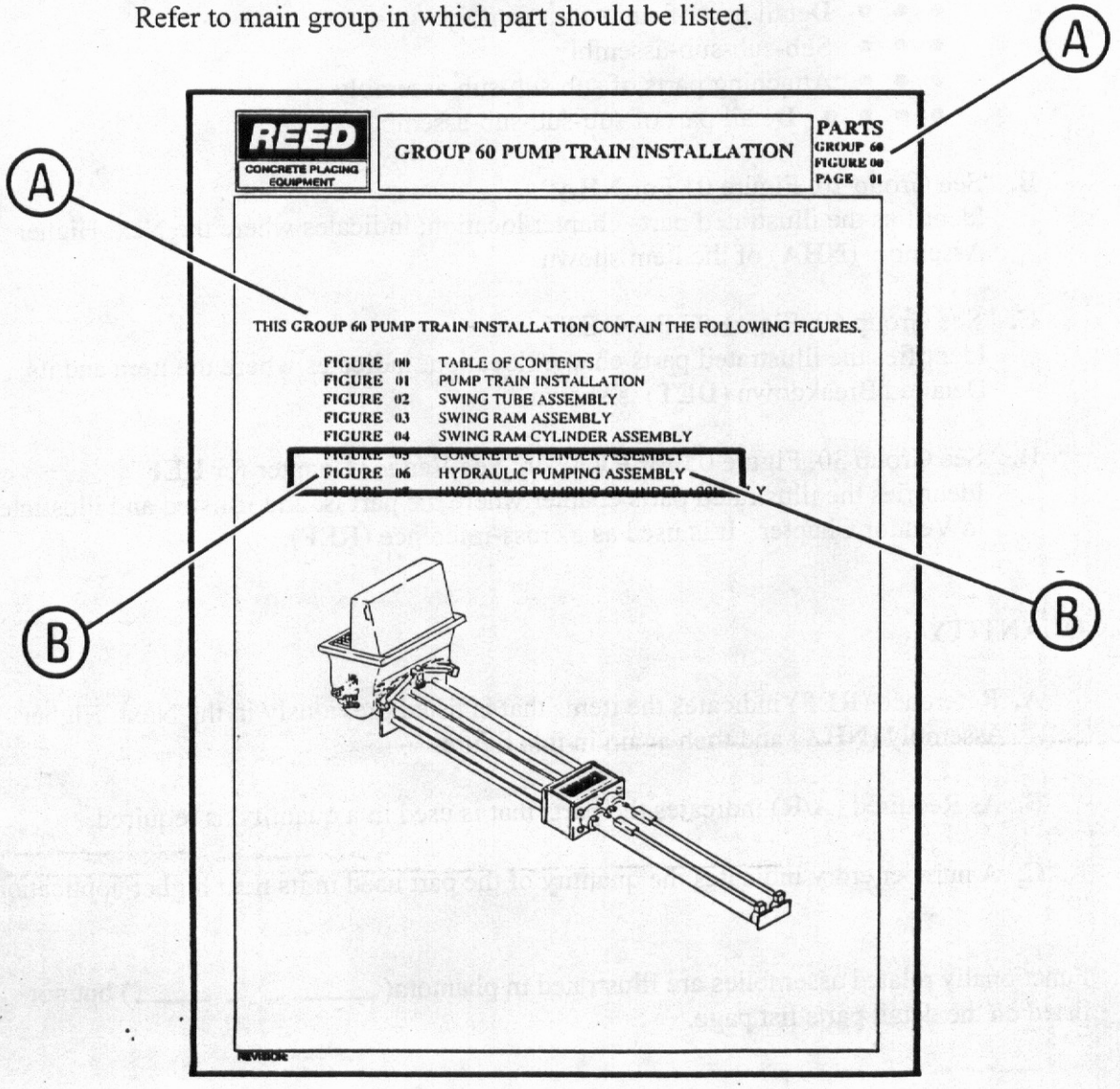

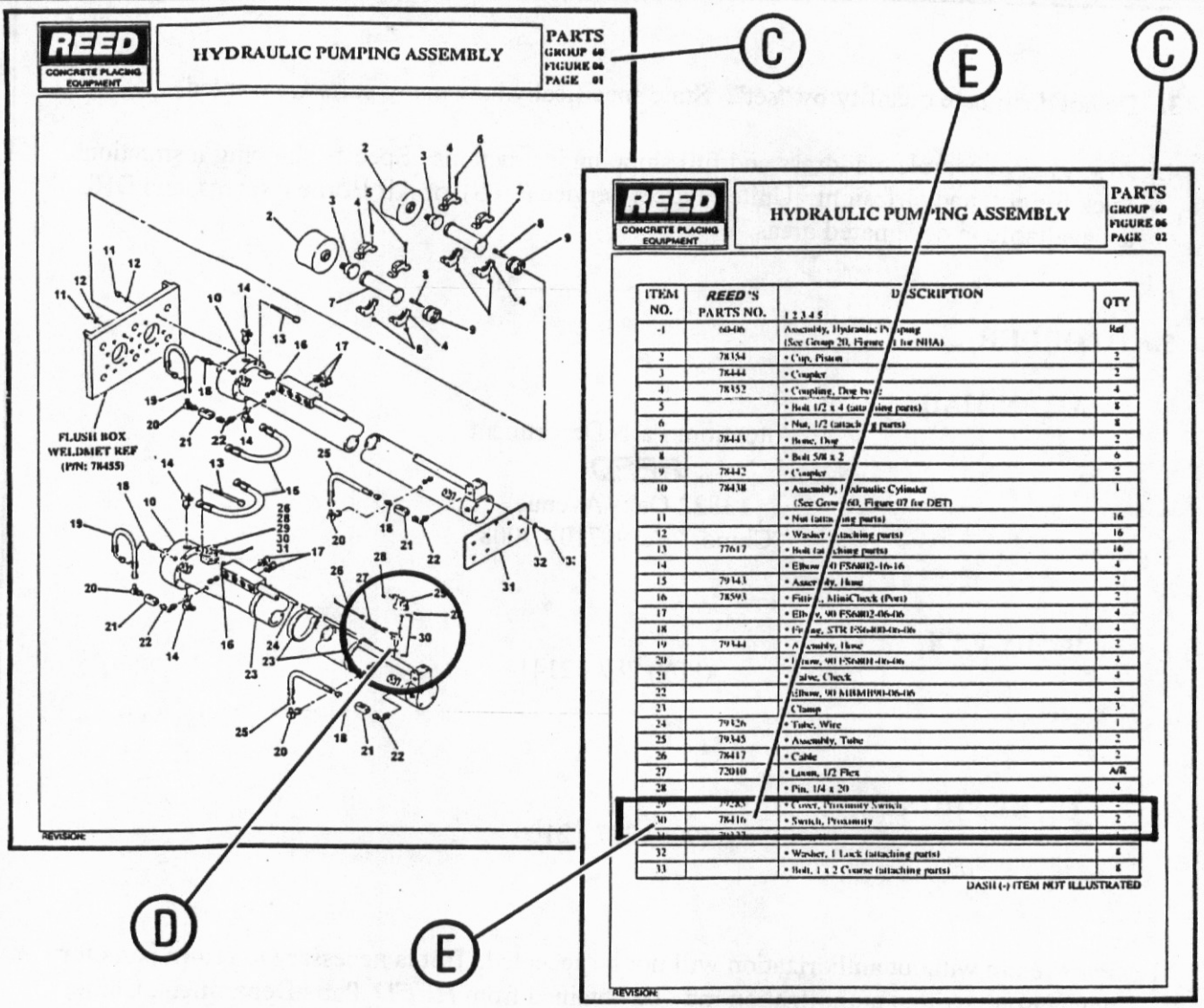

B. Find title of figure in which the part should be shown. Note figure number.

C. Turn to corresponding page, find the group and figure.

D. Check your required part and its attaching parts and match with illustration page.

E. Refer to corresponding item number in the part list page.
Part numbers are located in the part number column.

F. When ordering variable or optional miscellaneous parts which are not found this in parts chapter, follow the above outlined procedure of how to order parts.

1). When applicable, give model and serial number of the component for which parts are desired.

2). In a specific, difficult to describe situation, a marked-up photograph or detailed sketch would be helpful.

3. Do not designate quantity by "set". State specifically how many parts are wanted.

4. Always give complete address and full shipping instructions. Specify shipping instructions, truck freight, and airfreight. United Parcel Service (UPS), or Air Borne Express, and DHL are available in designated areas.

5. **TO ORDER**

   A. BY MAIL

   Attention: Parts Department
   REED
   13822 Oaks Avenue
   Chino, CA. 91710 - 7008

   B. BY FAX

   (909) 287 - 2141

   C. BY PHONE

   (909) 287 - 2100

6. Parts return without authorization will not be accepted. If it is necessary to return parts for any reason, written authorization may be obtained from ***REED*** Parts Department, Chino, CA. 91710-7008. A Parts Return Authorization form is provided when ***REED*** deems its necessary to have the part returned for evaluation. The form is issued by the Warranty of Parts Department of ***REED.***

   A. The form will be filled by ***REED*** unless requesting necessary information and you will receive a copy as well as shipping tag.

   B. Attach shipping tag to part insert return original invoice.

   C. Ship part to ***REED*** **PREPAID.**

   D. Part must be returned to ***REED*** within 30 days from date of authorization.

REED *PNEUMATIC SPRAYING MACHINE* **MODEL *209* ILLUSTRATED PARTS MANUAL GROUP 10 FINAL INSTALLATION** CONTAINS THE FOLLOWING FIGURES:

FIGURE 00 TABLE OF CONTENTS
FIGURE 01 FINAL INSTALLATION
FIGURE 02 DECAL ASSEMBLY

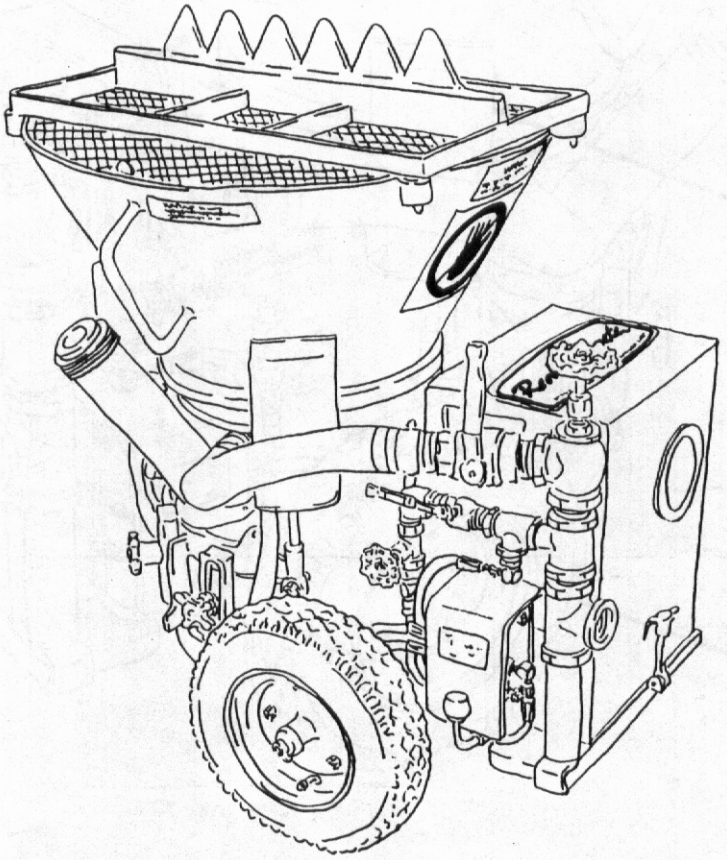

FINAL INSTALLATION

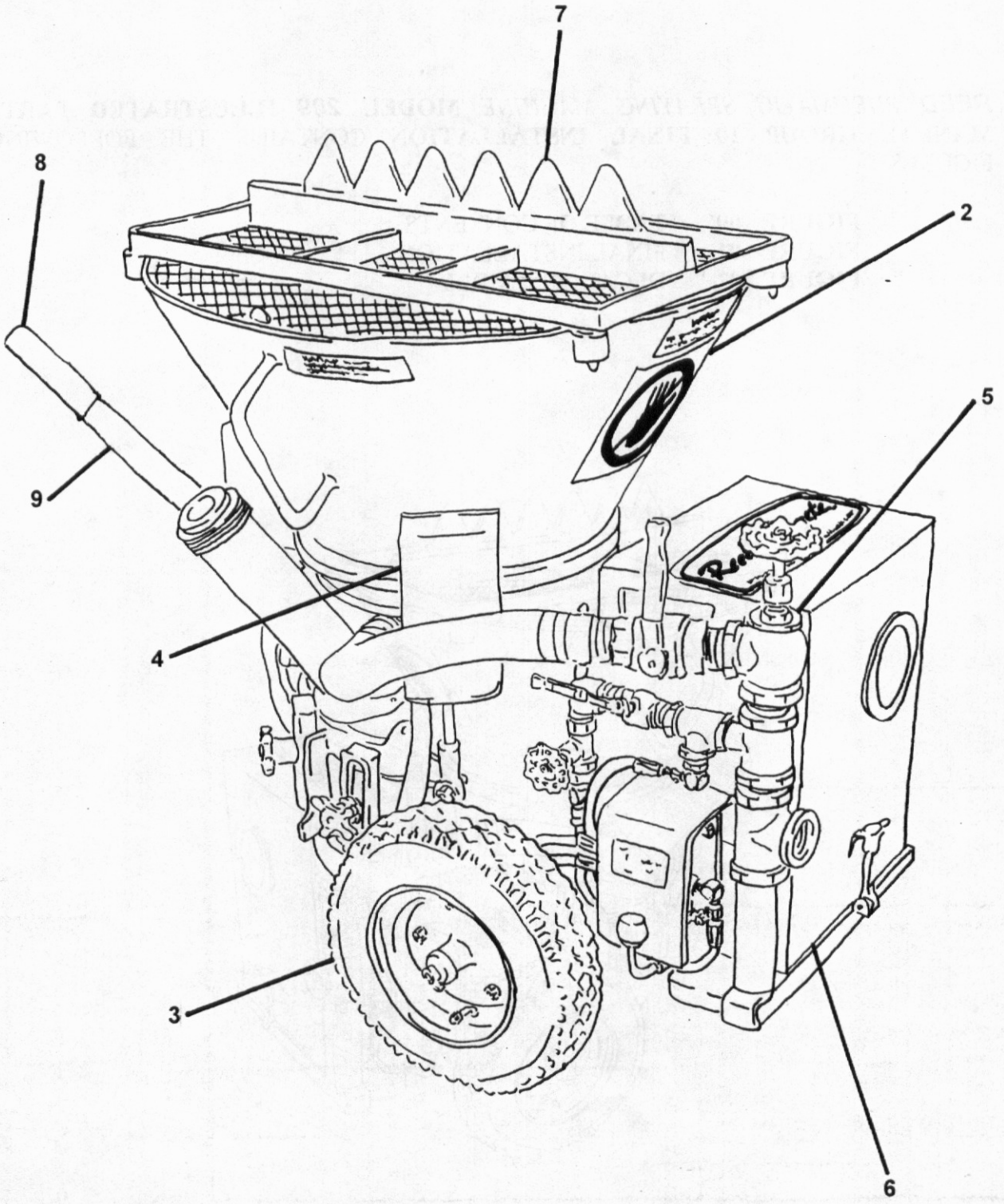

ITEM NO.	*REED*'S PARTS NO.	DESCRIPTION 1 2 3 4 5	QTY
-1	2030	Installation, ***209A*** Final	Ref
2	10-02	• Assembly, Decal (See Group 10, Figure 02 for DET)	1
3	30-01	• Installation, Base Gear (See Group 30, Figure 01 for DET)	1
4	40-01	• Installation, Hopper and Pad (See Group 40, Figure 01 for DET)	1
5	50-01	• Installation, Air Inlet (See Group 50, Figure 01 for DET)	1
6	60-01	• Installation, Accessories (See Group 60, Figure 01 for DET)	1
7	70-01	• Installation, Optional (See Group 70, Figure 01 for DET)	1
8	10899	• Grip, Handle	1
9	10914	• Handle, 35"	1

DASH (-) ITEM NOT ILLUSTRATED

REED
CONCRETE PLACING EQUIPMENT

DECAL ASSEMBLY

PARTS
GROUP 10
FIGURE 02
PAGE 01

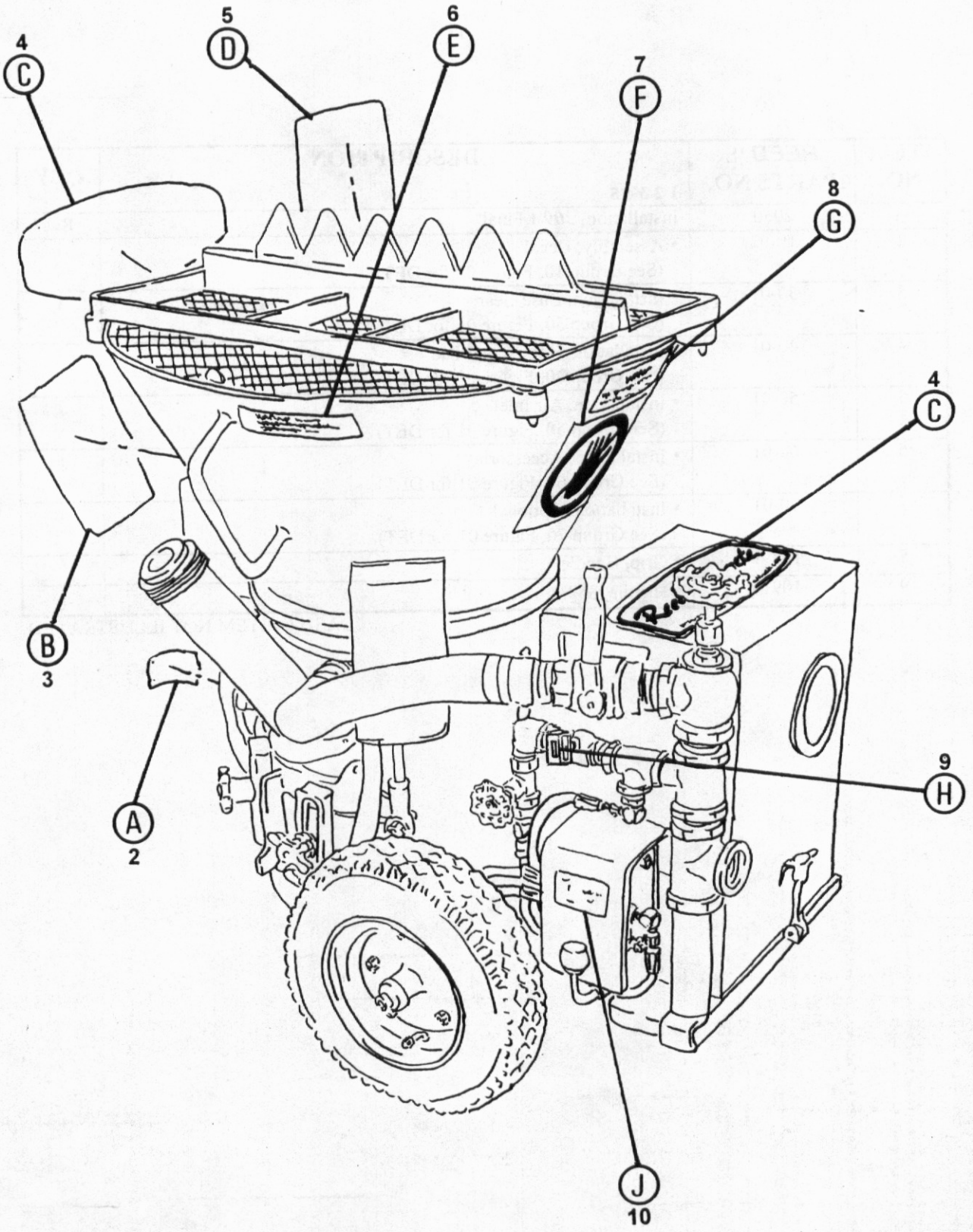

ITEM NO.	*REED*'S PARTS NO.	DESCRIPTION 1 2 3 4 5	QTY
-1	10-02	Assembly, Decal (See Group 10, Figure 01 for NHA)	Ref
2	13095 √	• Nameplate, Guns Serial Number	1
3	10839 √	• Decal, **WARNING**, The Wear Pad Area of this Machine is	1
4	10833 √	• Decal, ***REED*** Guncrete	2
5	10840 √	• Decal, **WARNING**, The Inside Hopper of this Machine has	1
6	10842 √	• Decal, **CAUTION**, Do Not Lift this Machine by Hopper Handle	2
7	75005 √	• Decal, **DANGER**, Do not Put Your Hands	2
8	10838 √	• Decal, **WARNING**, Safety Glasses	2
9	13121 √	• Nameplate, Material Feed	1
10	13299 √	• Nameplate, Pad Clamping Control	1

DASH (-) ITEM NOT ILLUSTRATED

20206 - Nameplate, Air - (1)

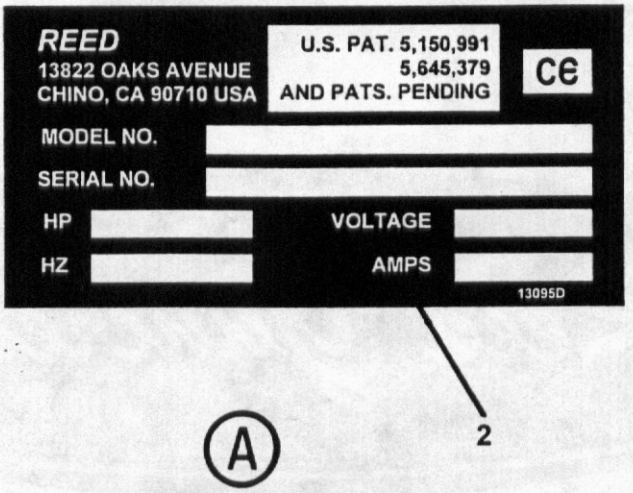

WARNING!

The wear pad area of this machine is extremely dangerous when the wear pad and Pad back-up assembly are removed.

It is essential that strict safety procedures be followed before performing any work in the wear pad area.

If maintenance must be performed in this area then proceed as follows:

(1) Shut off power.
Air / electric

(2) Disconnect air feed line or electric cord.

Work in the wear pad area can now be performed safety.

Upon completion of this work, reconnect air feed line or electric cord, and restore power.

3

B

Reed Guncrete®
REED MANUFACTURING CO., INC. P.O. BOX 906 WALNUT, CALIF. 91789 U.S.A.

4

C

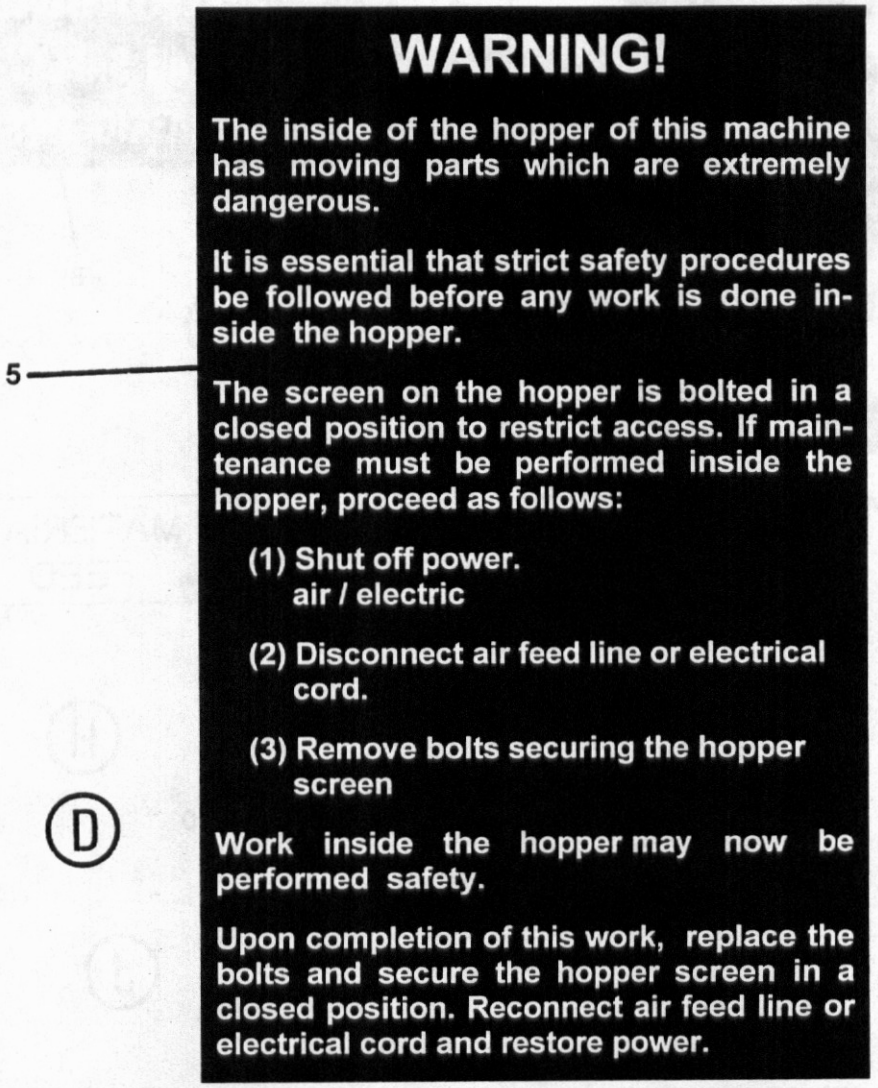
WARNING!
The inside of the hopper of this machine has moving parts which are extremely dangerous.
It is essential that strict safety procedures be followed before any work is done inside the hopper.
5
The screen on the hopper is bolted in a closed position to restrict access. If maintenance must be performed inside the hopper, proceed as follows:
(1) Shut off power.
air / electric
(2) Disconnect air feed line or electrical cord.
(3) Remove bolts securing the hopper screen
D
Work inside the hopper may now be performed safety.
Upon completion of this work, replace the bolts and secure the hopper screen in a closed position. Reconnect air feed line or electrical cord and restore power.

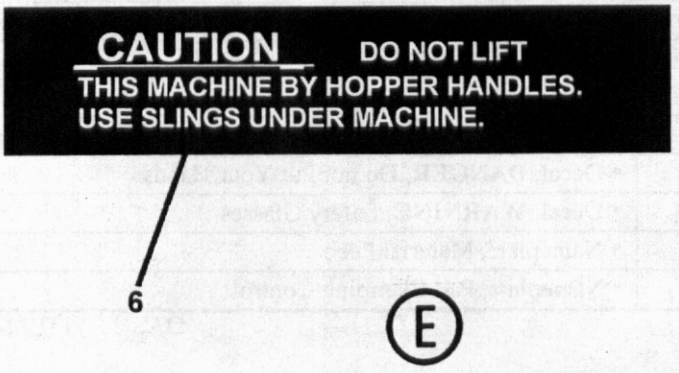
CAUTION DO NOT LIFT
THIS MACHINE BY HOPPER HANDLES.
USE SLINGS UNDER MACHINE.
6
E

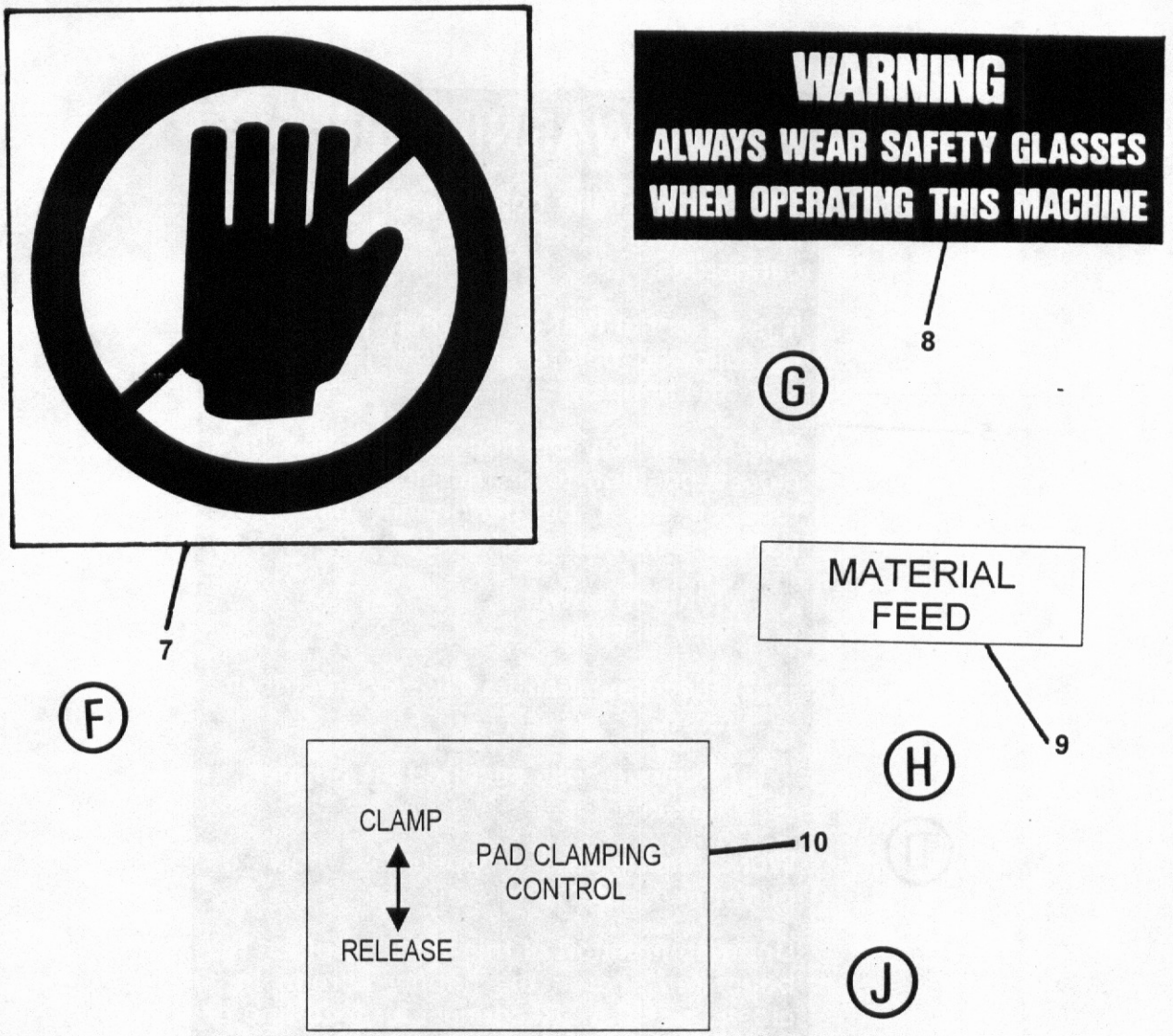

ITEM NO.	*REED*'S PARTS NO.	DESCRIPTION 1 2 3 4 5	QTY
-1	10-02	Assembly, Decal (See Group 10, Figure 01 for NHA)	Ref
2	13095	• Nameplate, Guns Serial Number	1
3	10839	• Decal, **WARNING**, The Wear Pad Area of this Machine is	1
4	10833	• Decal, ***REED*** Guncrete	2
5	10840	• Decal, **WARNING**, The Inside Hopper of this Machine has	1
6	10842	• Decal, **CAUTION**, Do Not Lift this Machine by Hopper Handle	2
7	75005	• Decal, **DANGER**, Do not Put Your Hands	2
8	10838	• Decal, **WARNING**, Safety Glasses	2
9	13121	• Nameplate, Material Feed	1
10	13299	• Nameplate, Pad Clamping Control	1

DASH (-) ITEM NOT ILLUSTRATED

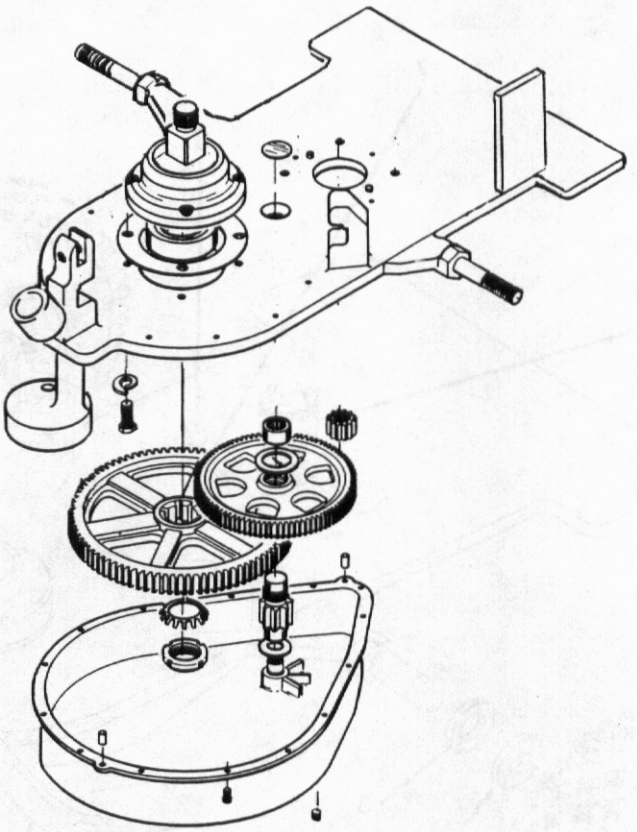

REED *PNEUMATIC SPRAYING MACHINE* **MODEL *209* ILLUSTRATED PARTS MANUAL GROUP 30 BASE GEAR INSTALLATION** CONTAINS THE FOLLOWING FIGURES:

FIGURE 00 TABLE OF CONTENTS
FIGURE 01 BASE INSTALLATION
FIGURE 02 BASE GEAR ASSEMBLY
FIGURE 03 DRIVE SPINDLE ASSEMBLY

BASE INSTALLATION

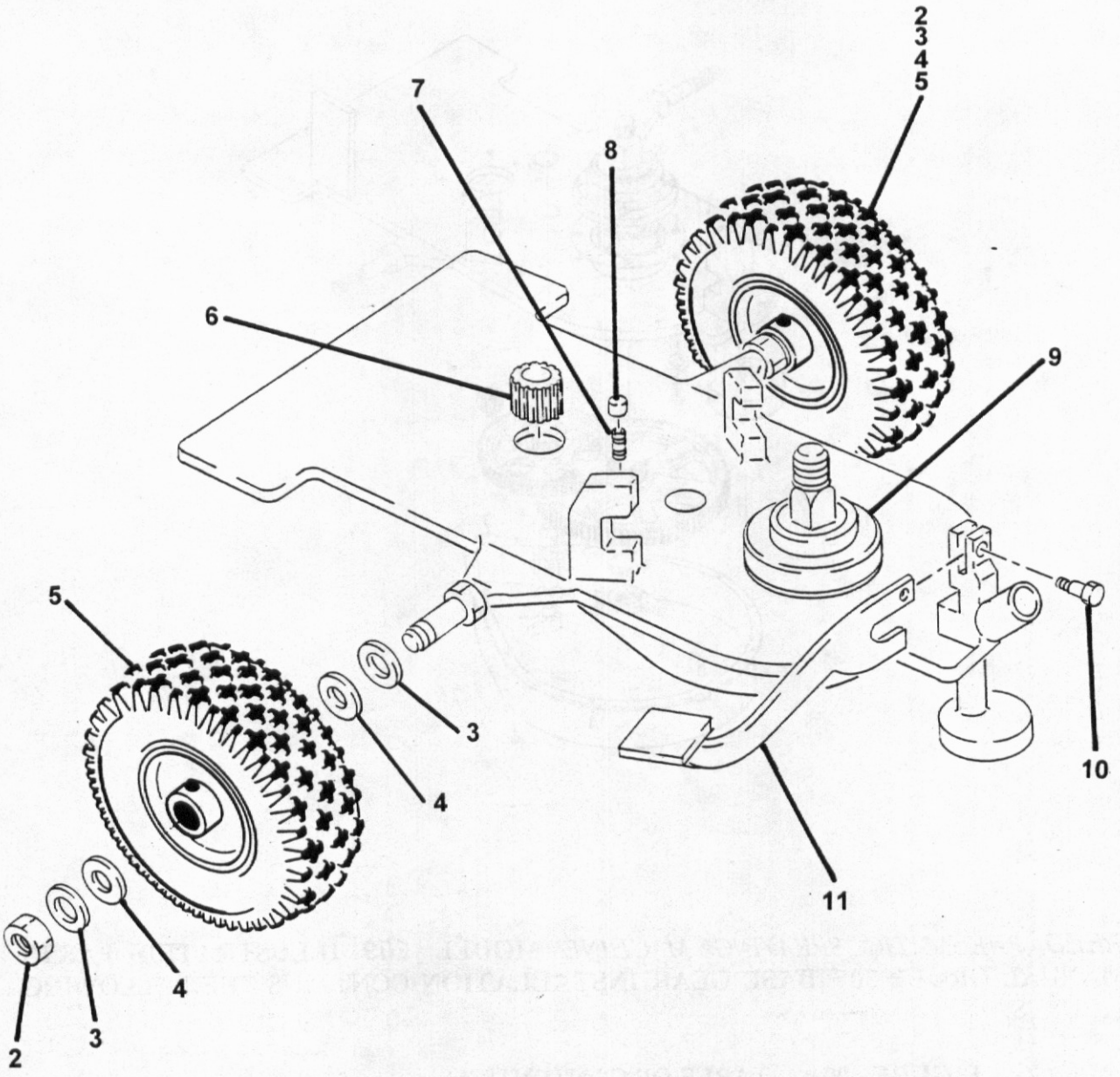

BASE INSTALLATION

ITEM NO.	*REED*'S PARTS NO.	DESCRIPTION 1 2 3 4 5	QTY
-1	30-01	Installation, Base (See Group 10, Figure 01 for NHA)	Ref
2	10738	• Nut, Flex Lock	2
3		• Washer, Flat	4
4	10714	• Washer, Felt	4
5	20052	• Assembly, Wheel and Tire	2
-5A	13321	• • Bearing, Wheel	1
6	20035	• Gear, Motor Drive	1
7	10707	• Pipe, Oil Filler	1
8	10706	• Cap, Oil Filler	1
9	20370	• Assembly, Base Gear (See Group 30, Figure 02 for DET)	1
10	10735	• Bolt, Shoulder	1
11	20058	• Weldment, Kicker	1

DASH (-) ITEM NOT ILLUSTRATED

REED
CONCRETE PLACING EQUIPMENT

BASE GEAR ASSEMBLY

PARTS
GROUP 30
FIGURE 02
PAGE 01

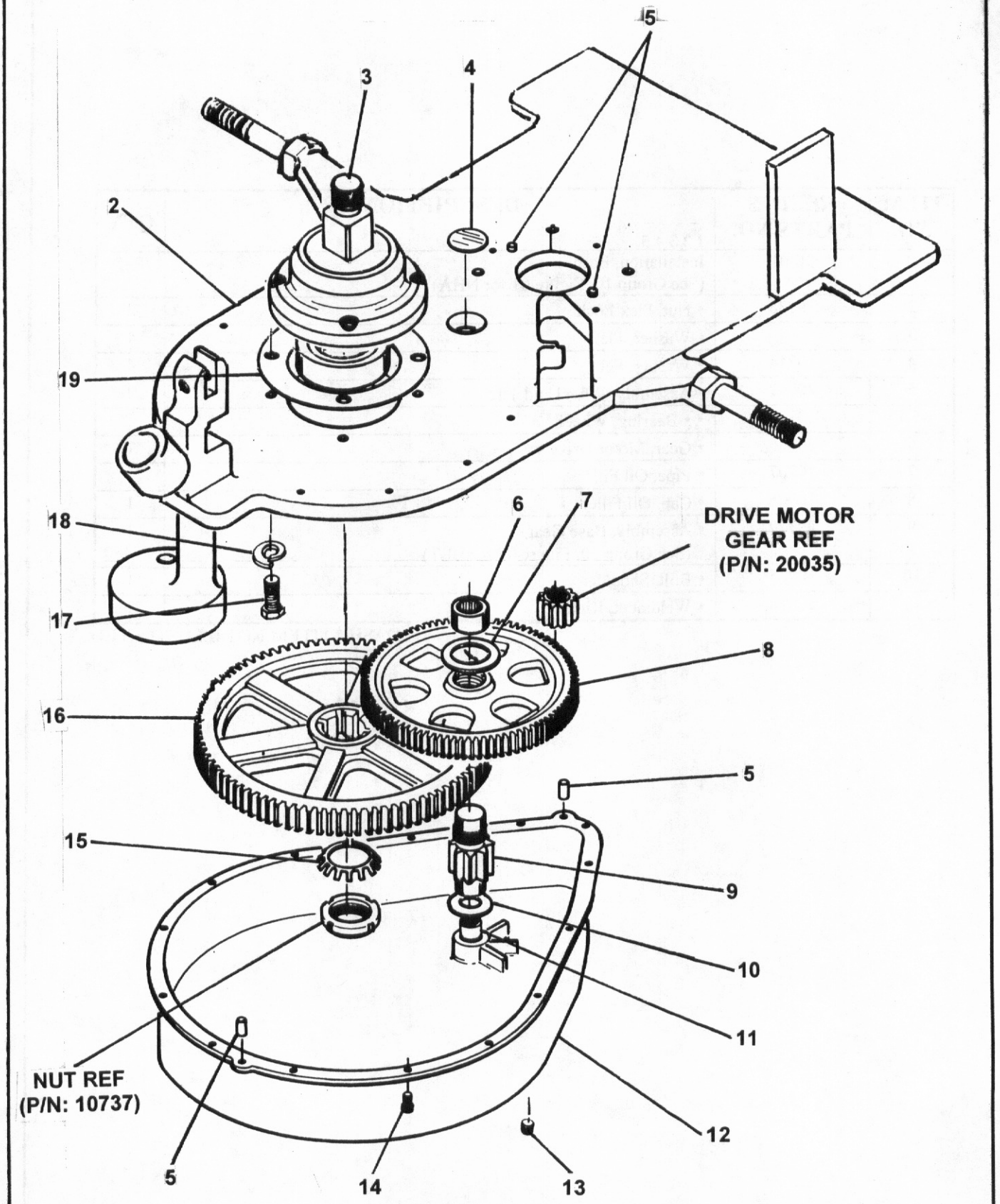

REVISION:

BASE GEAR ASSEMBLY

ITEM NO.	*REED*'S PARTS NO.	DESCRIPTION 1 2 3 4 5	QTY
-1	20370	Assembly, Base Gear (See Group 30, Figure 02 for NHA)	Ref
2	20371	• Weldment, Base Plate	1
3	20149	• Assembly, Drive Spindle (See Group 30, Figure 03 for DET)	1
4	20411	• Cover, Bearing	1
5	80360	• Pin, Dowel	4
6	20036	• Bearing, Top	1
7	20038	• Washer, Thrust	1
8	20034	• Gear, Idler	1
9	20033	• Gear, Idler Pinion	1
10	20039	• Washer, Pan Thrust	1
11	20037	• Bearing, Bottom	1
12	20025	• Pan, Gear	1
13	74745	• Plug, Drain	1
14	80253	• Screw, Gear Pan	14
15	10736	• Washer, Lock	1
16	20030	• Gear, Bull	1
17	80121	• Screw, Hex	4
18	80072	• Washer, Lock	4
19	20042	• Gasket, Spindle Housing	1

DASH (-) ITEM NOT ILLUSTRATED

DRIVE SPINDLE ASSEMBLY

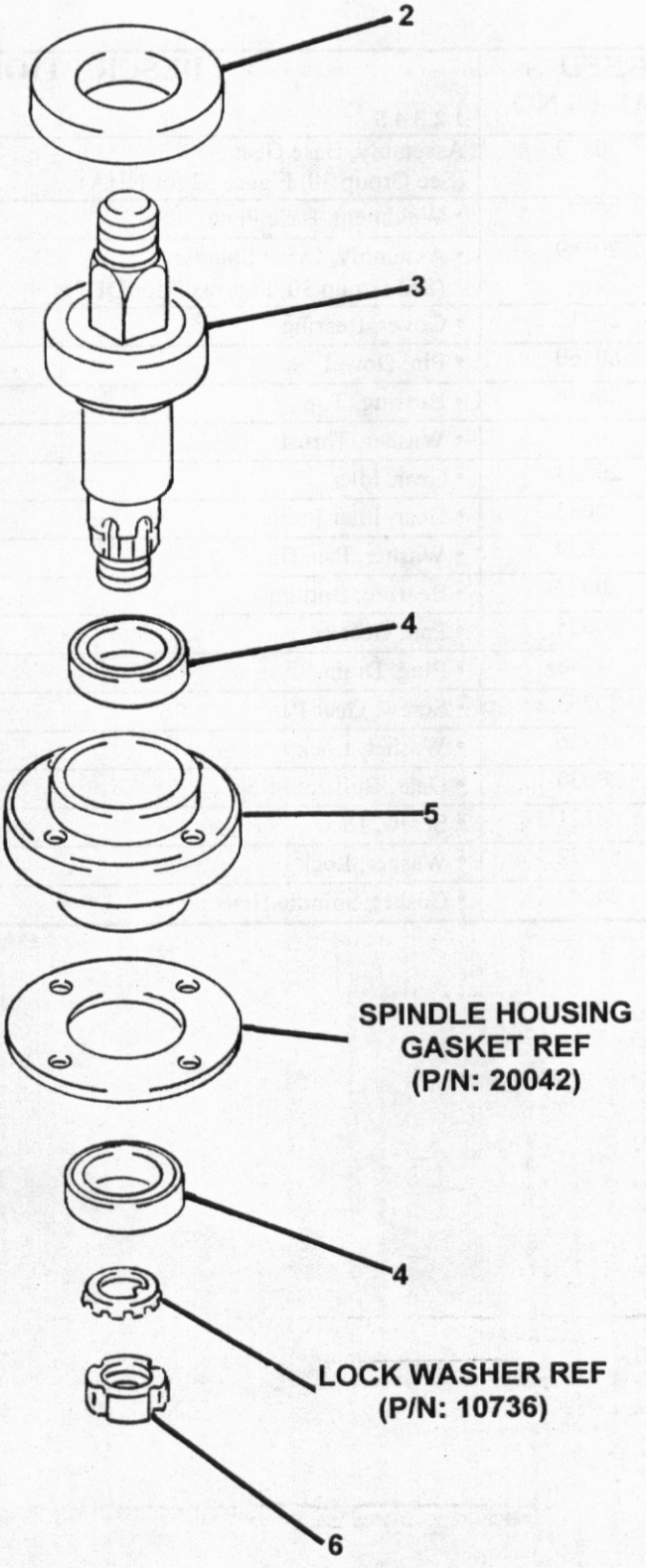

DRIVE SPINDLE ASSEMBLY

ITEM NO.	*REED*'S PARTS NO.	DESCRIPTION 1 2 3 4 5	QTY
-1	20149	Assembly, Drive Spindle (See Group 30, Figure 03 for NHA)	Ref
2	20029	• Seal, Spindle	1
3	20026	• Hub, Spindle	1
4	20027	• Bearing, Upper Spindle	2
5	20028	• Housing, Spindle	1
6	10737	• Nut, Lock	1

DASH (-) ITEM NOT ILLUSTRATED

THIS PAGE INTENTIONALLY LEFT BLANK.

REED *PNEUMATIC SPRAYING MACHINE* **MODEL *209* ILLUSTRATED PARTS MANUAL GROUP 40 HOPPER AND PAD INSTALLATION** CONTAINS THE FOLLOWING FIGURES:

FIGURE 00 TABLE OF CONTENTS
FIGURE 01 HOPPER AND PAD INSTALLATION
FIGURE 02 AIR CYLINDER INSTALLATION
FIGURE 03 AIR CYLINDER ASSEMBLY
FIGURE 04 HOSE KIT ASSEMBLY
FIGURE 05 PAD BACKUP ASSEMBLY
FIGURE 06 FEED WHEEL HOUSING INSTALLATION
FIGURE 07 FEED WHEEL ASSEMBLY

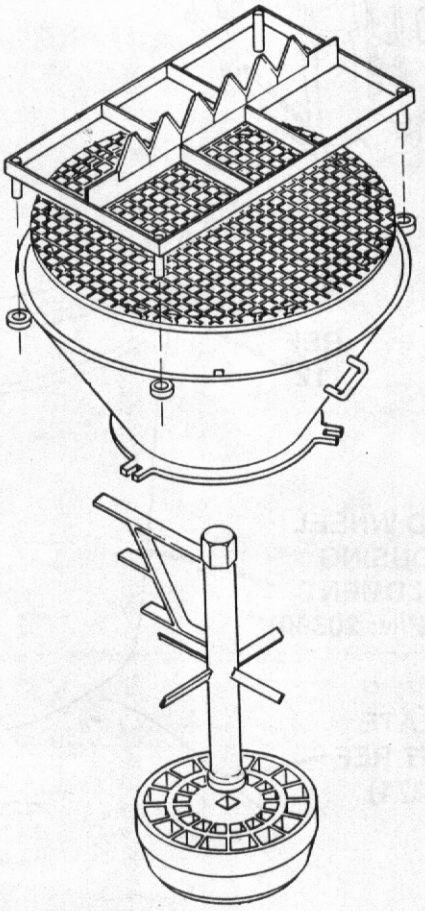

HOPPER AND PAD INSTALLATION

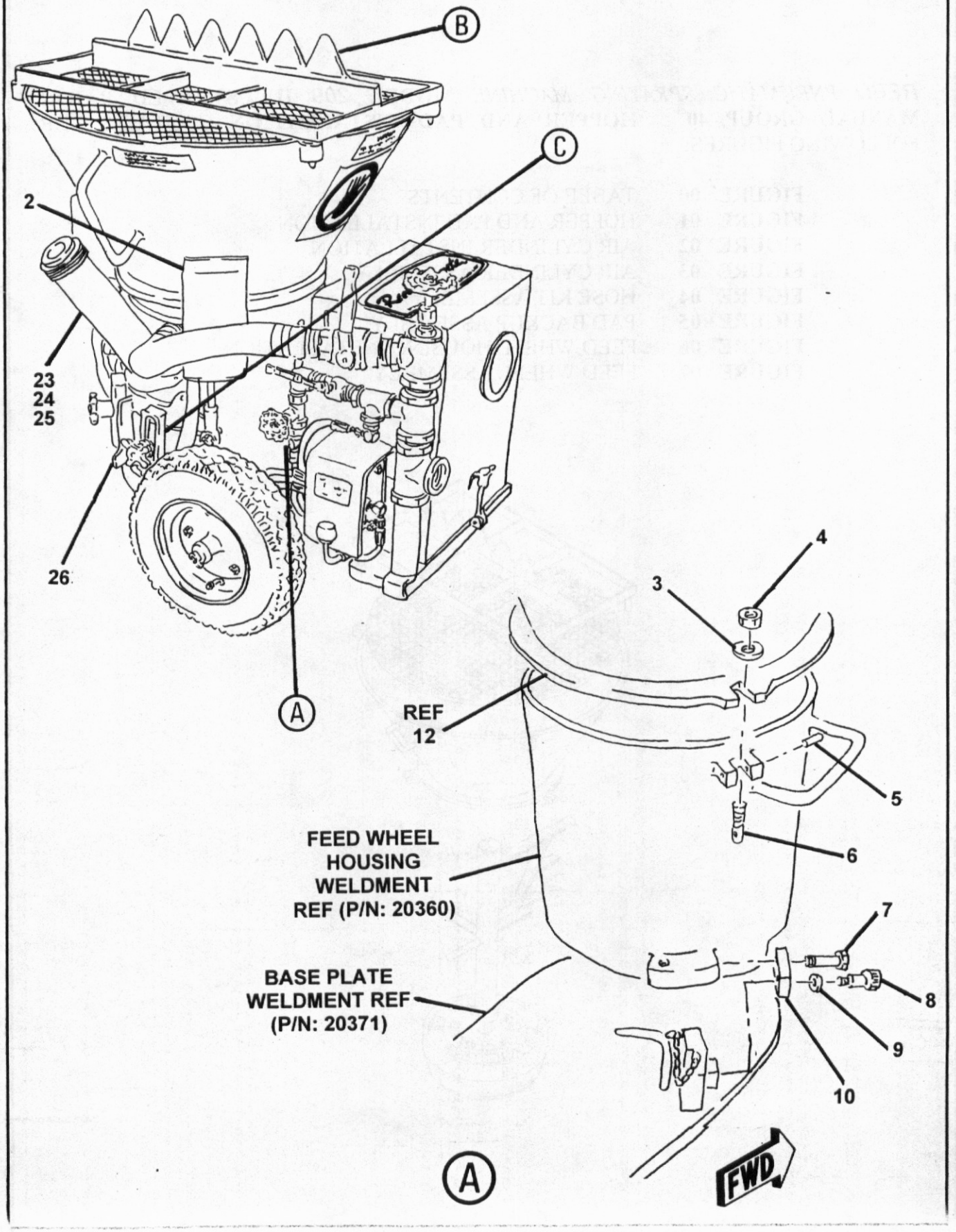

HOPPER AND PAD INSTALLATION

ITEM NO.	*REED*'S PARTS NO.	DESCRIPTION 1 2 3 4 5	QTY
-1	40-01	Assembly, Hopper and Pad (See Group 10, Figure 01 for NHA)	Ref
2	40-02	• Installation, Air Cylinder (See Group 40, Figure 02 for DET)	1
3		• Washer, Flat	1
4		• Nut, Lock	1
5	80297	• Pin, Spring	1
6	20154	• Bolt, Swing	1
7		• Bolt, Hex	1
8	10735	• Bolt, Shoulder	1
9		• Washer, Flat	1
10	20392	• Stop, Block	1
11	20084	• Weldment, Screen	1
12	20380	• Weldment, Hopper	1
13	20098	• Weldment, Agitator	1
14A	20089	• Bowl, 16 Pocket with Divider Feed	1
14B	20189	• Bowl, 18 Pocket without Divider Feed	1
15	20172	• Plate, Thin Riser	A/R
16	20173	• Plate, Medium Riser	A/R
17	20174	• Plate, Thick Riser	A/R
18		• Bolt, Hex	2
19		• Washer, Flat	2
20		• Screw, Thumb	1
21	20072	• Clamp, Block Pad	2
22	20075	• Knob, Block Pad	2
23	20368	• Assembly, Standard 1-1/2 CT Pad Backup (See Group 40, Figure 05 for DET)	1
24	20367	• Assembly, Optional 1-1/2 CRSE Pad Backup (See Group 70, Figure 02 for DET)	1
25	20366	• Assembly, Optional 1-1/4 CRSE Pad Backup (See Group 70, Figure 03 for DET)	1
26	40-06	• Installation, Pad Housing (See Group 40, Figure 06 for DET)	1

DASH (-) ITEM NOT ILLUSTRATED

HOPPER AND PAD INSTALLATION

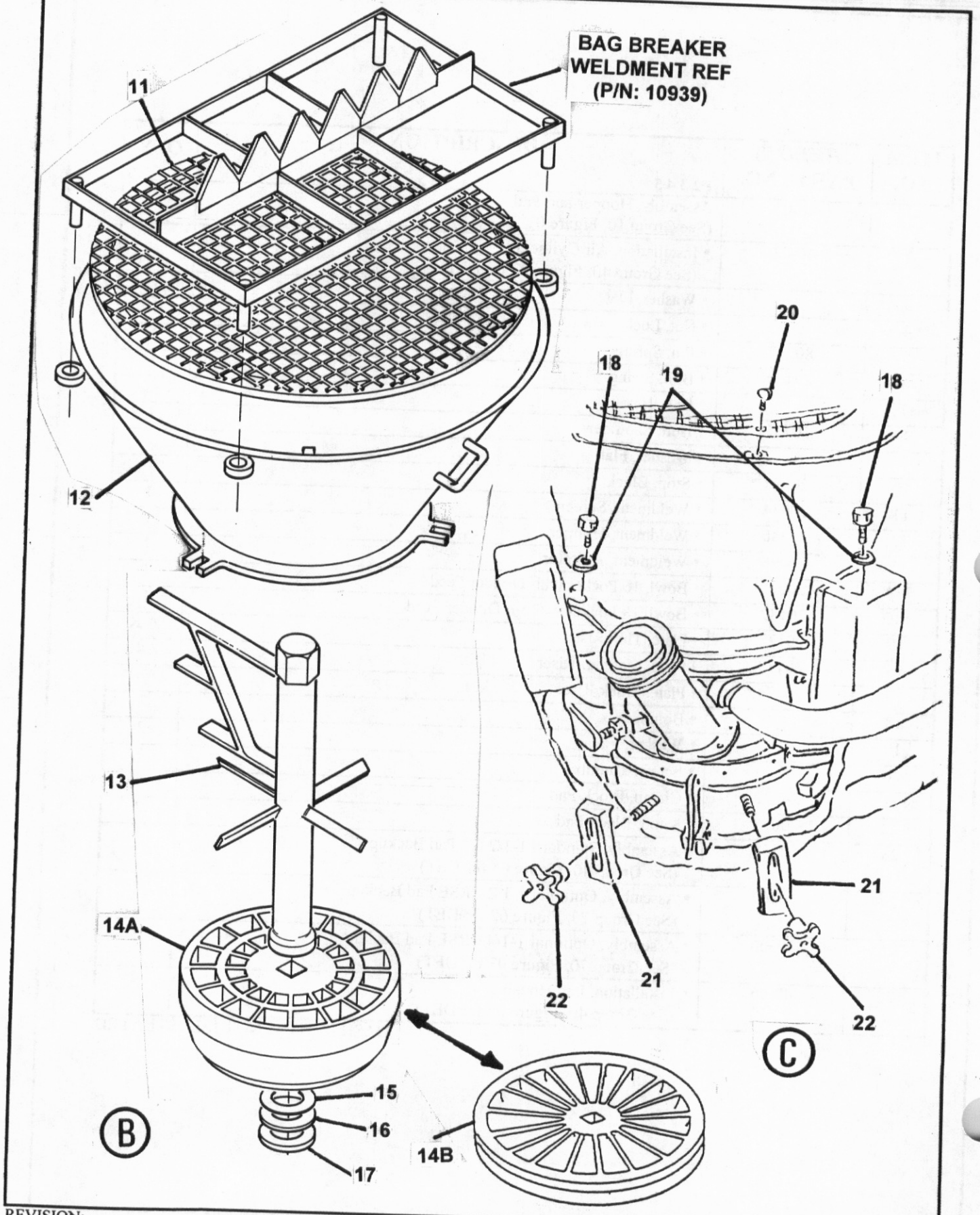

REVISION:

ITEM NO.	*REED*'S PARTS NO.	DESCRIPTION 1 2 3 4 5	QTY
-1	40-01	Assembly, Hopper and Pad (See Group 10, Figure 01 for NHA)	Ref
2	40-02	• Installation, Air Cylinder (See Group 40, Figure 02 for DET)	1
3		• Washer, Flat	1
4		• Nut, Lock	1
5	80297	• Pin, Spring	1
6	20154	• Bolt, Swing	1
7		• Bolt, Hex	1
8	10735	• Bolt, Shoulder	1
9		• Washer, Flat	1
10	20392	• Stop, Block	1
11	20084	• Weldment, Screen	1
12	20380	• Weldment, Hopper	1
13	20098	• Weldment, Agitator	1
14A	20089	• Bowl, 16 Pocket with Divider Feed	1
14B	20189	• Bowl, 18 Pocket without Divider Feed	1
15	20172	• Plate, Thin Riser	A/R
16	20173	• Plate, Medium Riser	A/R
17	20174	• Plate, Thick Riser	A/R
18		• Bolt, Hex	2
19		• Washer, Flat	2
20		• Screw, Thumb	1
21	20072	• Clamp, Block Pad	2
22	20075	• Knob, Block Pad	2
23	20368	• Assembly, Standard 1-1/2 CT Pad Backup (See Group 40, Figure 05 for DET)	1
24	20367	• Assembly, Optional 1-1/2 CRSE Pad Backup (See Group 70, Figure 02 for DET)	1
25	20366	• Assembly, Optional 1-1/4 CRSE Pad Backup (See Group 70, Figure 03 for DET)	1
26	40-06	• Installation, Pad Housing (See Group 40, Figure 06 for DET)	1

DASH (-) ITEM NOT ILLUSTRATED

REED
CONCRETE PLACING EQUIPMENT

AIR CYLINDER INSTALLATION

PARTS
GROUP 40
FIGURE 02
PAGE 01

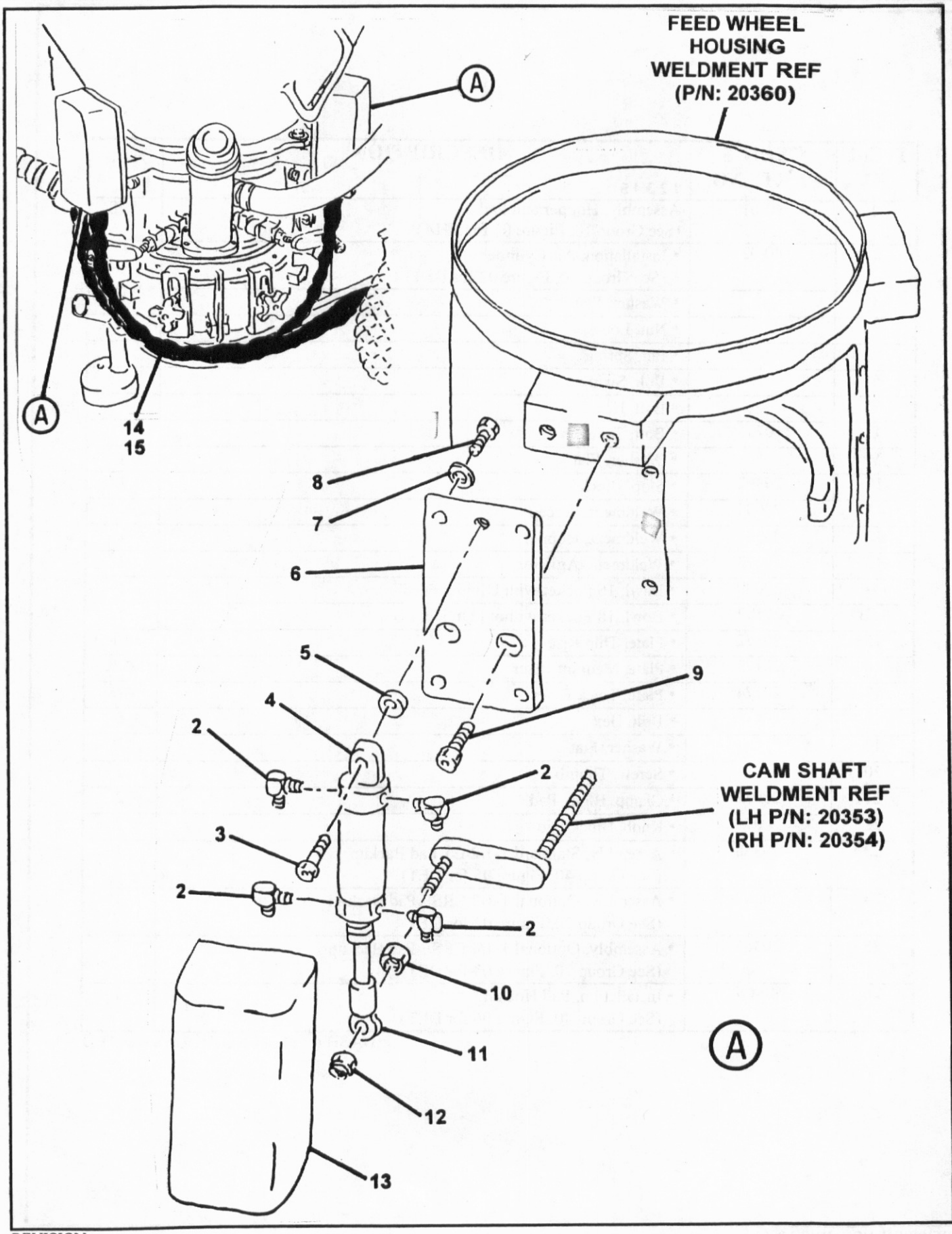

REVISION:

AIR CYLINDER INSTALLATION

ITEM NO.	*REED*'S PARTS NO.	DESCRIPTION 1 2 3 4 5	QTY
-1	40-02	Installation, Air Cylinder (See Group 40, Figure 01 for NHA)	Ref
2	77391	• Elbow, Street	8
3	13183	• Bolt, Shoulder	2
4	13003	• Assembly, Air Cylinder (See Group 40, Figure 03 for DET)	2
5	13265	• Spacer, Air Cylinder	2
6	20364	• Plate, Air Cylinder Brass Mounting	2
7		• Washer, Flat	8
8		• Bolt, Hex	8
9		• Bolt	6
10		• Nut	2
11	13216	• End, Female Rod	2
12		• Nut, Lock	2
13	20363	• Weldment, Air Cylinder Brass Guard	2
14	13280	• Kit, Hose (See Group 40, Figure 04 for DET)	1
15	90477	• Protector, Hose	1

DASH (-) ITEM NOT ILLUSTRATED

AIR CYLINDER ASSEMBLY

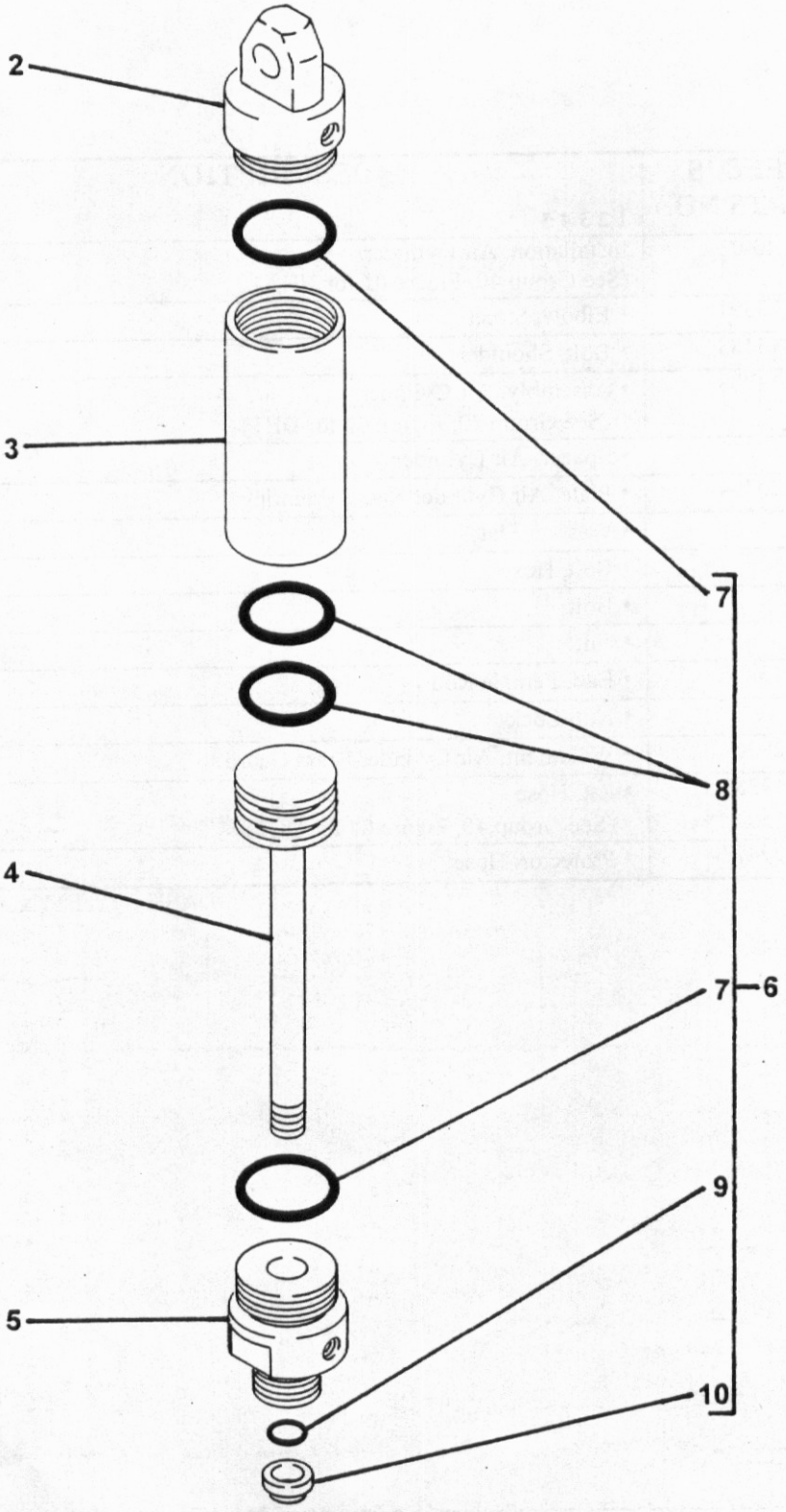

AIR CYLINDER ASSEMBLY

ITEM NO.	*REED*'S PARTS NO.	DESCRIPTION 1 2 3 4 5	QTY
-1	13003	Assembly, Air Cylinder (See Group 40, Figure 02 for NHA)	Ref
2		• End, Cap	1
3		• Tube	1
4		• Rod, Piston	1
5		• Cap, Rod	1
6	13279	• Kit, Seal	1
7		• • Seal, Tube	2
8		• • Seal, Piston	2
9		• • Seal, Rod	1
10		• • Wiper, Rod	1

DASH (-) ITEM NOT ILLUSTRATED

THIS GROUP 40, FIGURE 04, PART NUMBER **13280**,
HOSE KIT, ILLUSTRATED PARTS BREAK DOWN
IS NOT AVAILABLE THIS REVISION.

ITEM NO.	*REED*'S PARTS NO.	DESCRIPTION 1 2 3 4 5	QTY
-1	13280	Kit, Hose (See Group 40, Figure 02 for NHA)	Ref
2	13283	• Hose, Cylinder Bottom to Cylinder Bottom	1
3	13284	• Hose, Cylinder Top to Cylinder Top	1
4	13285	• Hose, Cylinder Top to Air Valve	1
5	13286	• Hose, Cylinder Bottom to Air Valve	1
6	13287	• Hose, Main Air to Cylinder Filter	1
7	13288	• Hose, Regulator to Cylinder Valve	1
8	13364	• Hose, Main Air to Motor Filter	1

DASH (-) ITEM NOT ILLUSTRATED

PAD BACKUP ASSEMBLY

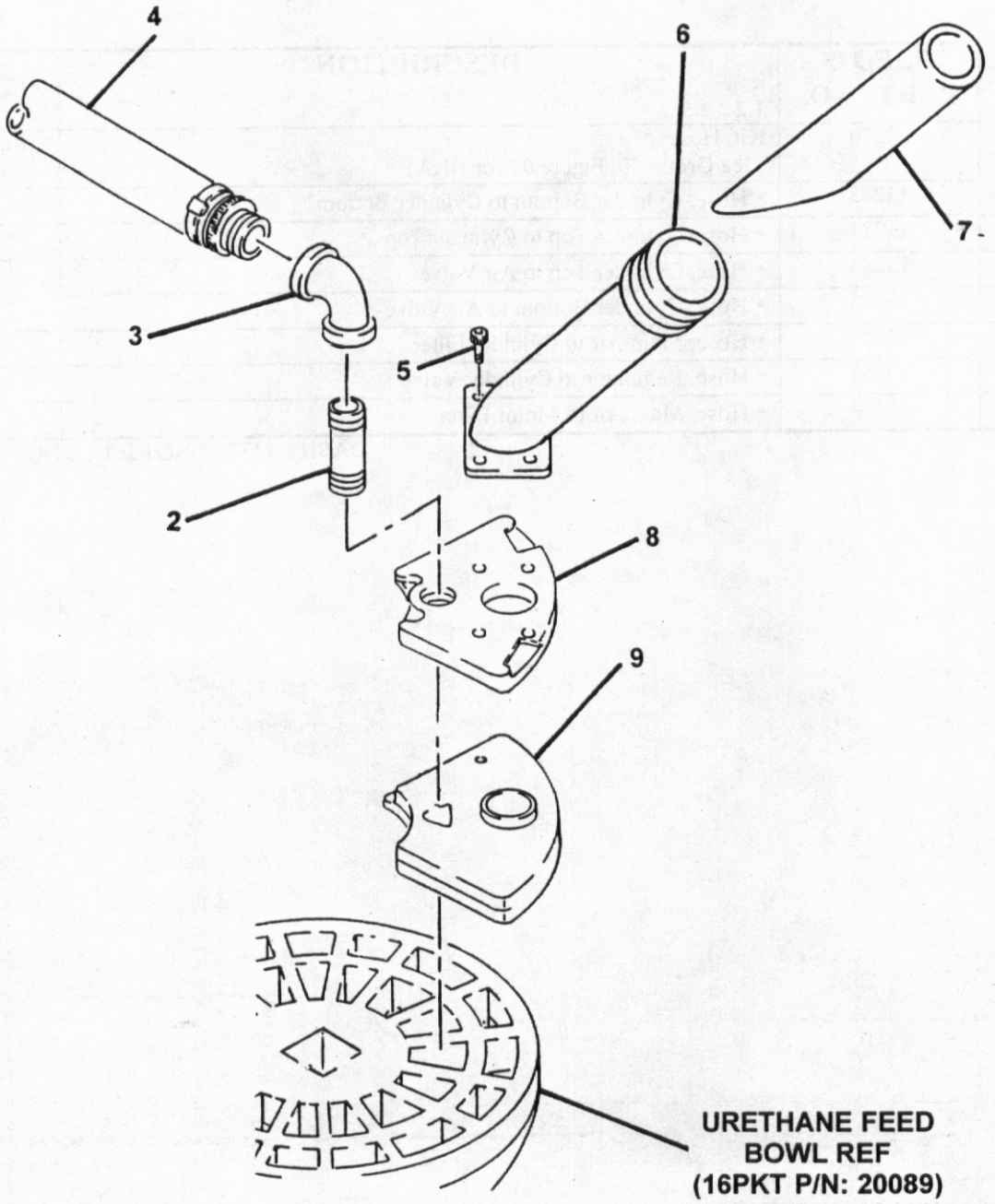

PAD BACKUP ASSEMBLY

ITEM NO.	*REED*'S PARTS NO.	DESCRIPTION 1 2 3 4 5	QTY
-1	20368	Assembly, Pad Backup (See Group 40, Figure 01 for NHA)	Ref
2	20144	• Nipple	1
3	20145	• Elbow, Reducer	1
4	10246	• Assembly, Crossover Hose	1
5	80270	• Screw, Phillister Head Shot	4
6	20097	• Weldment, 1.5 Inch Liner Type Goose Neck	1
7	20086	• Liner, 1.5 Inch	1
8	20092	• Plate, Pad Backup	1
9	20090	• Wearpad, Rubber	1

DASH (-) ITEM NOT ILLUSTRATED

FEED WHEEL HOUSING INSTALLATION

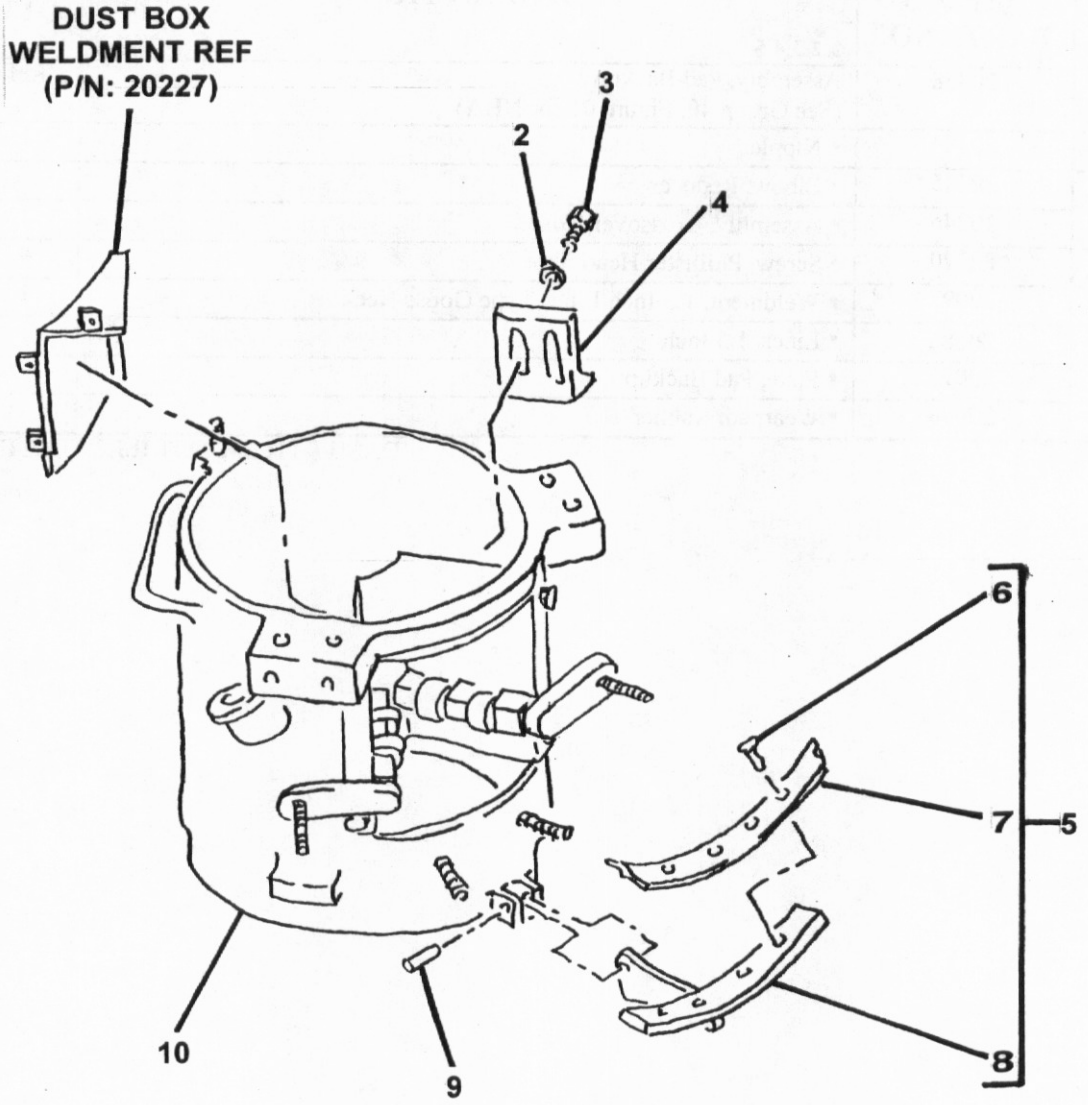

FEED WHEEL HOUSING INSTALLATION

ITEM NO.	*REED*'S PARTS NO.	DESCRIPTION 1 2 3 4 5	QTY
-1	40-06	Installation, Feed Wheel Housing (See Group 40, Figure 01 for NHA)	Ref
2		• Washer, Flat	2
3		• Bolt, Hex	2
4	20388	• Shear, Rock	1
5	20067	• Assembly, Pad Clamp	1
6	80355	• • Rivet, Pop	4
7	20069	• • Rubber, Strip	1
8		• • Weldment, Pad Clamp	1
9	80297	• Pin, Spring	1
10	20369	• Assembly, Feed Wheel Housing (See Group 40, Figure 07 for DET)	1

DASH (-) ITEM NOT ILLUSTRATED

FEED WHEEL HOUSING ASSEMBLY

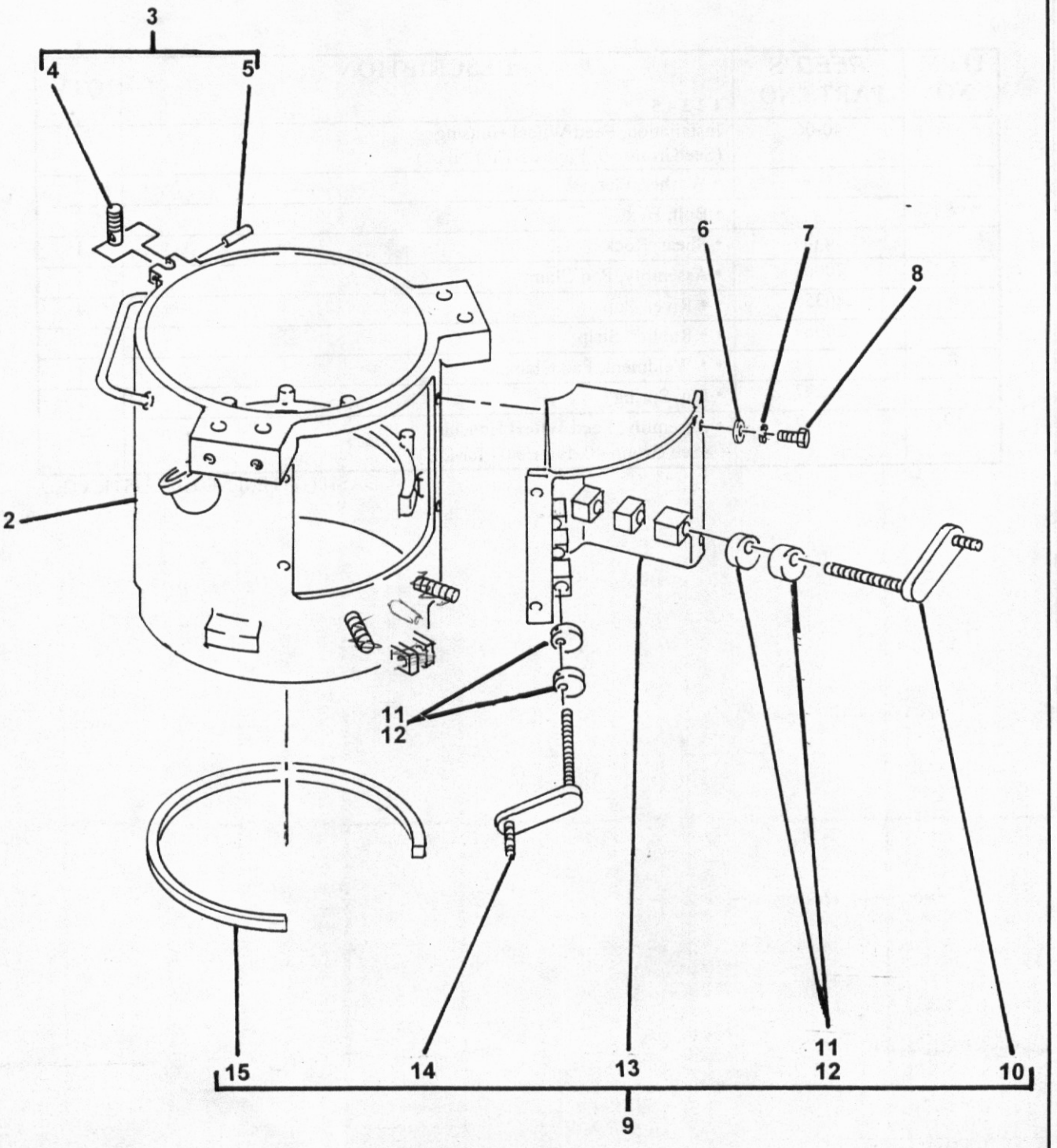

FEED WHEEL HOUSING ASSEMBLY

ITEM NO.	*REED*'S PARTS NO.	DESCRIPTION 1 2 3 4 5	QTY
-1	20369	Assembly, Feed Wheel Housing (See Group 40, Figure 06 for NHA)	Ref
2	20360	• Weldment, Feed Wheel Housing	1
3	20066	• • Assembly, Swing Bolt	1
4	20154	• • • Bolt, Swing	1
5	80297	• • • Pin, Spring	1
6		• Washer, Flat	4
7		• Washer, SPL Lock	4
8		• Bolt, Hex	4
9	20355	• Assembly, Pad Housing	1
10	20353	• • Weldment, Left Cam Shaft	1
11	60039	• • Cam	4
12	80295	• • Pin, Spring	4
13	20233	• • Weldment, Pad Housing	1
14	20354	• • Weldment, Right Cam Shaft	1
15	20158	• Seal, Felt	1

DASH (-) ITEM NOT ILLUSTRATED

THIS PAGE INTENTIONALLY LEFT BLANK.

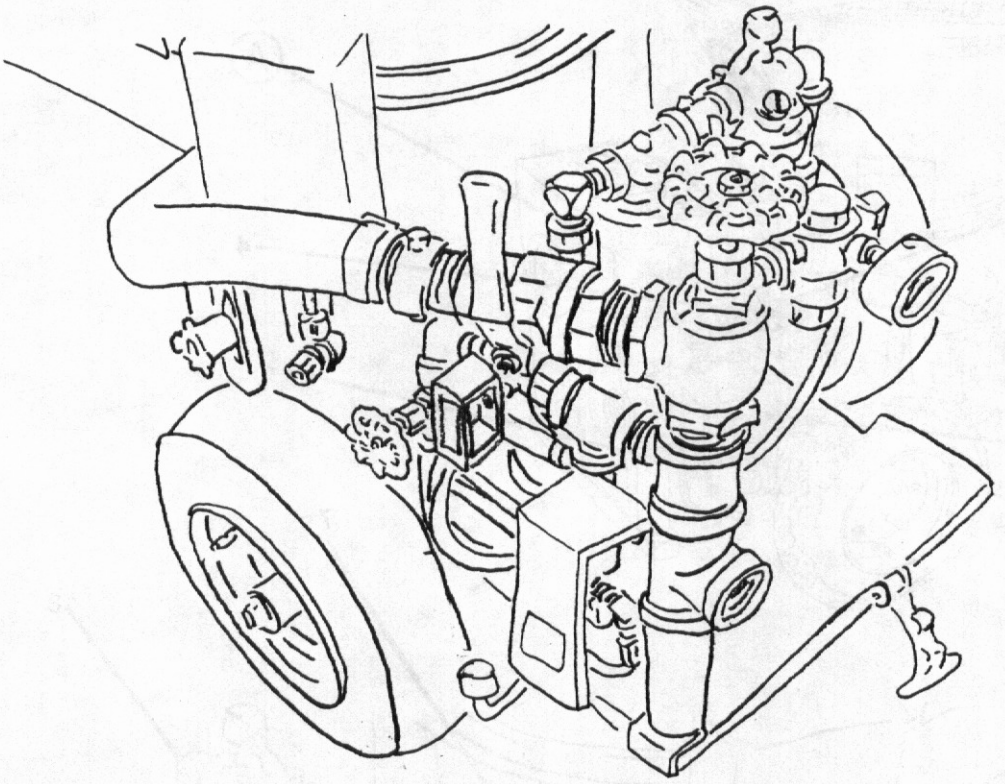

REED *PNEUMATIC SPRAYING MACHINE* **MODEL *209* ILLUSTRATED PARTS MANUAL GROUP 50 AIR INLET INSTALLATION** CONTAINS THE FOLLOWING FIGURES:

FIGURE 00 TABLE OF CONTENTS
FIGURE 01 AIR INLET INSTALLATION
FIGURE 02 AIR MOTOR AND VALVE ASSEMBLY
FIGURE 03 AIR MOTOR ASSEMBLY
FIGURE 04 LUBRICATOR AND FILTER SUB-ASSEMBLY
FIGURE 05 AIR MOTOR LUBRICATOR ASSEMBLY
FIGURE 06 AIR INLET SUB-ASSEMBLY

AIR INLET INSTALLATION

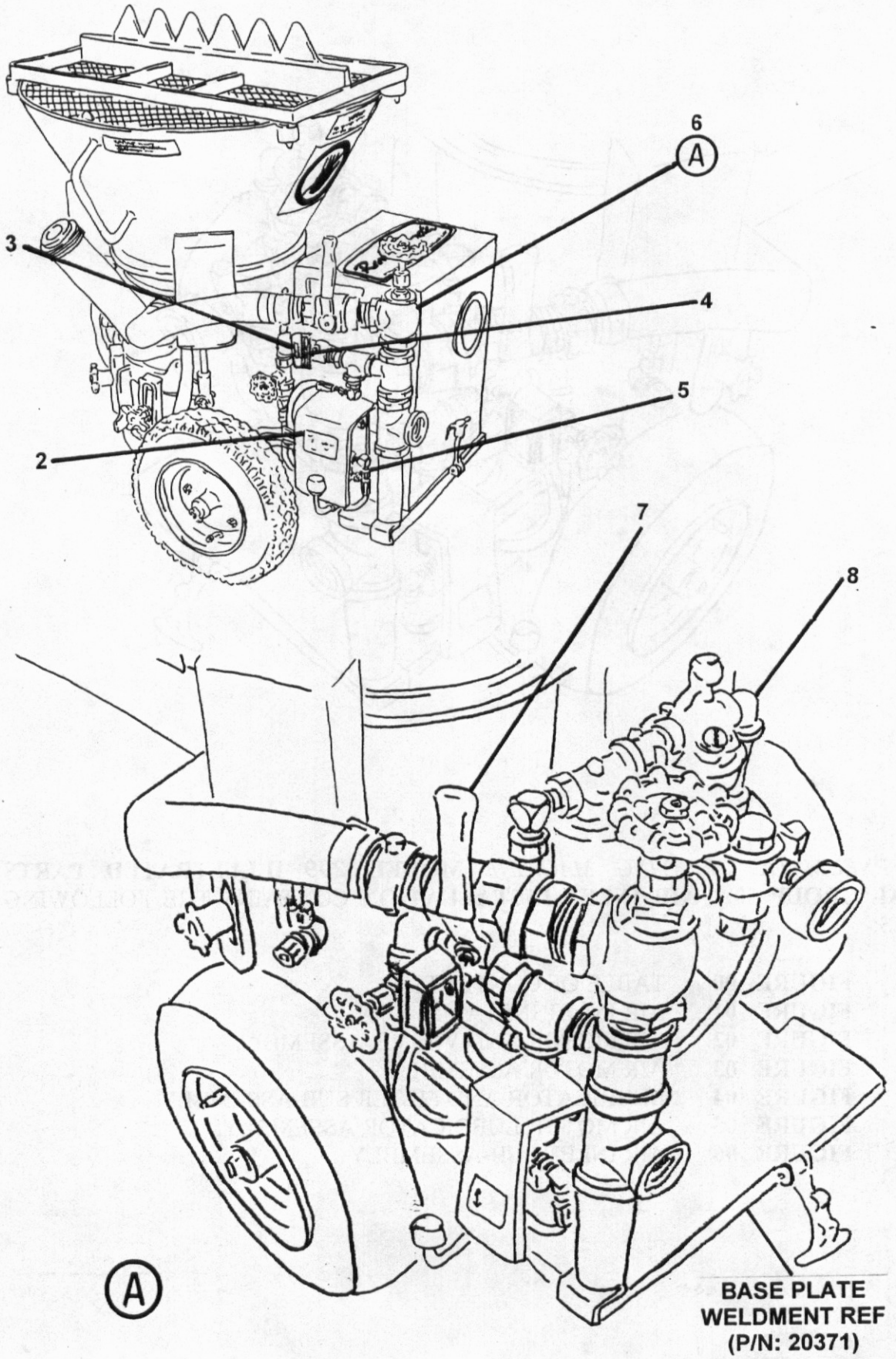

AIR INLET INSTALLATION

ITEM NO.	*REED*'S PARTS NO.	DESCRIPTION 1 2 3 4 5	QTY
-1	50-01	Installation, Air Inlet (See Group 10, Figure 01 and Group 20, Figure 01 for NHA)	Ref
2	13299	• Nameplate, Pad Clamping Control	1
3	13121	• Nameplate, Material Feed	1
4	13157	• Weldment, Valve Handle	1
5	50-02	• Assembly, Air Motor and Valve (See Group 50, Figure 02 for DET)	1
6	20372	• Assembly, Air Inlet	1
7	50-04	• • Sub-Assembly, Air Lubricator and Filter (See Group 50, Figure 04 for DET)	1
8	50-06	• • Sub-Assembly, Air Inlet (See Group 50, Figure 06 for DET)	1

DASH (-) ITEM NOT ILLUSTRATED

AIR MOTOR AND VALVE ASSEMBLY

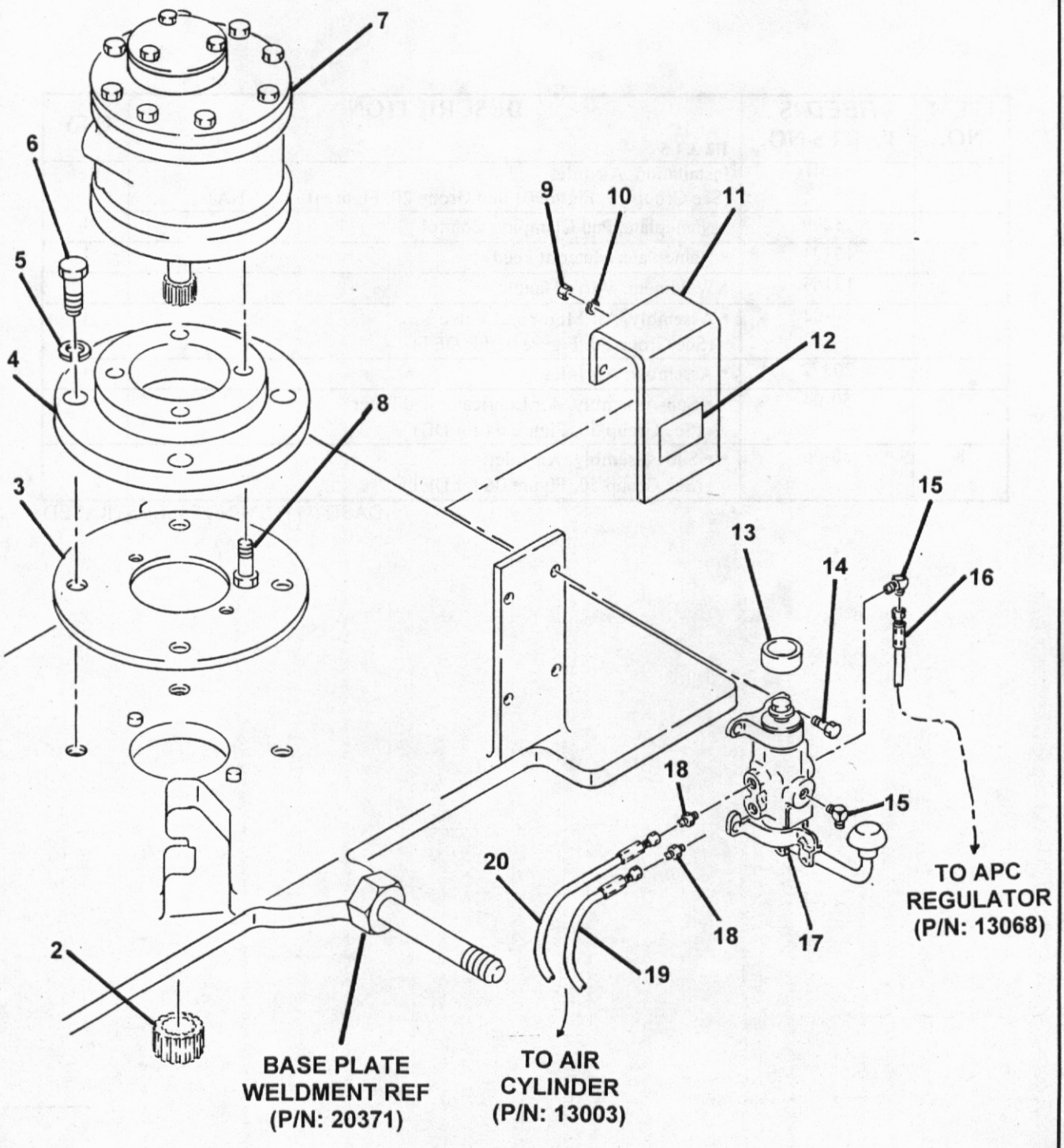

AIR MOTOR AND VALVE ASSEMBLY

ITEM NO.	*REED*'S PARTS NO.	DESCRIPTION 1 2 3 4 5	QTY
-1	50-02	Assembly, Air Motor and Valve (See Group 50, Figure 01 for NHA)	Ref
2	20035	• Gear, Drive Motor	1
3	20194	• Gasket, Adapter Ring	1
4	20051	• Plate, Air Motor Adapter	1
5	80074	• Washer, Lock	4
6	80151	• Bolt, Hex	4
7	10600	• Assembly, Air Motor (See Group 50, Figure 03 for DET)	1
8	80250	• Screw, Socket	4
9		• Nut, Hex	2
10		• Washer, Lock	2
11	20413	• Cover, Valve	1
12	13299	• Nameplate, Pad Clamping Control	1
13		• Bushing, Rubber	1
14		• Bolt, Hex	2
15		• Fitting, 90	2
16	13288	• Assembly, Air Hose	1
17	13298	• Assembly, Pad Clamping Air Valve	1
18		• Connector, STR	2
19	13286	• Assembly, Air Hose	1
20	13285	• Assembly, 0 – 160 PSI Air Hose	1

DASH (-) ITEM NOT ILLUSTRATED

REED
CONCRETE PLACING EQUIPMENT

AIR MOTOR ASSEMBLY

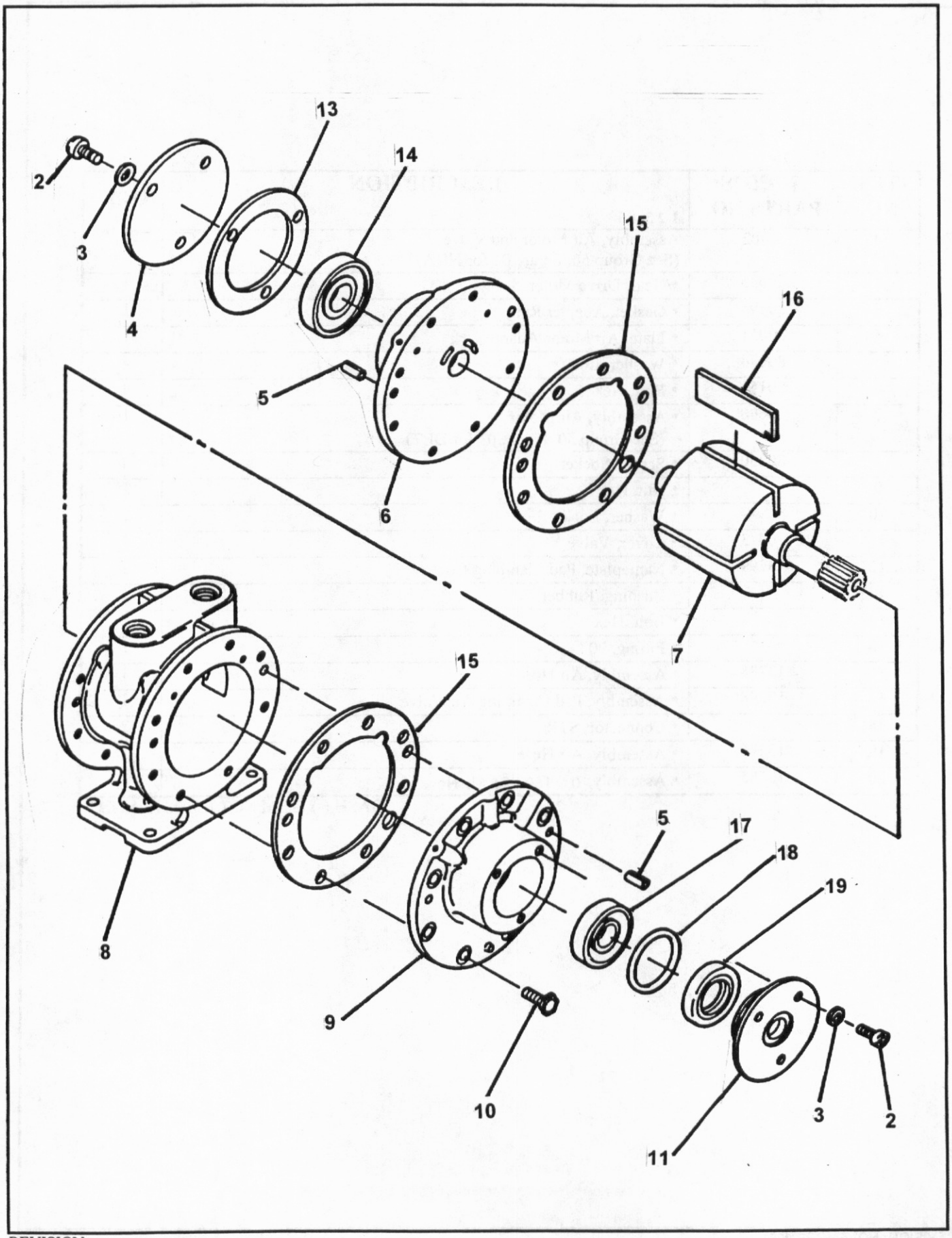

REVISION:

AIR MOTOR ASSEMBLY

ITEM NO.	*REED*'S PARTS NO.	DESCRIPTION 1 2 3 4 5	QTY
-1	10600	Assembly, Air Motor (See Group 50, Figure 02 for NHA)	Ref
2		• Screw, Cap	6
3		• Washer, Lock	6
4		• Cap, Dead End	1
5		• Pin, Dowel	4
6		• Plate, Dead End	1
7		• Assembly, Rotor	1
8		• Body, Air Motor	1
9		• Plate, Drive End	1
10		• Bolt, Hex	8
11		• Cap, Drive End	1
-12	10605	• Kit, Repair	1
13		• • Gasket, Dead End Cap	1
14		• • Bearing, Dead End	1
15	10601	• • Gasket, Body Spacer	2
16	10602	• • Vane	4
17		• • Bearing, Drive End	1
18		• • O-Ring	1
19		• • Seal, Shaft	1

DASH (-) ITEM NOT ILLUSTRATED

AIR LUBRICATOR AND FILTER SUB-ASSEMBLY

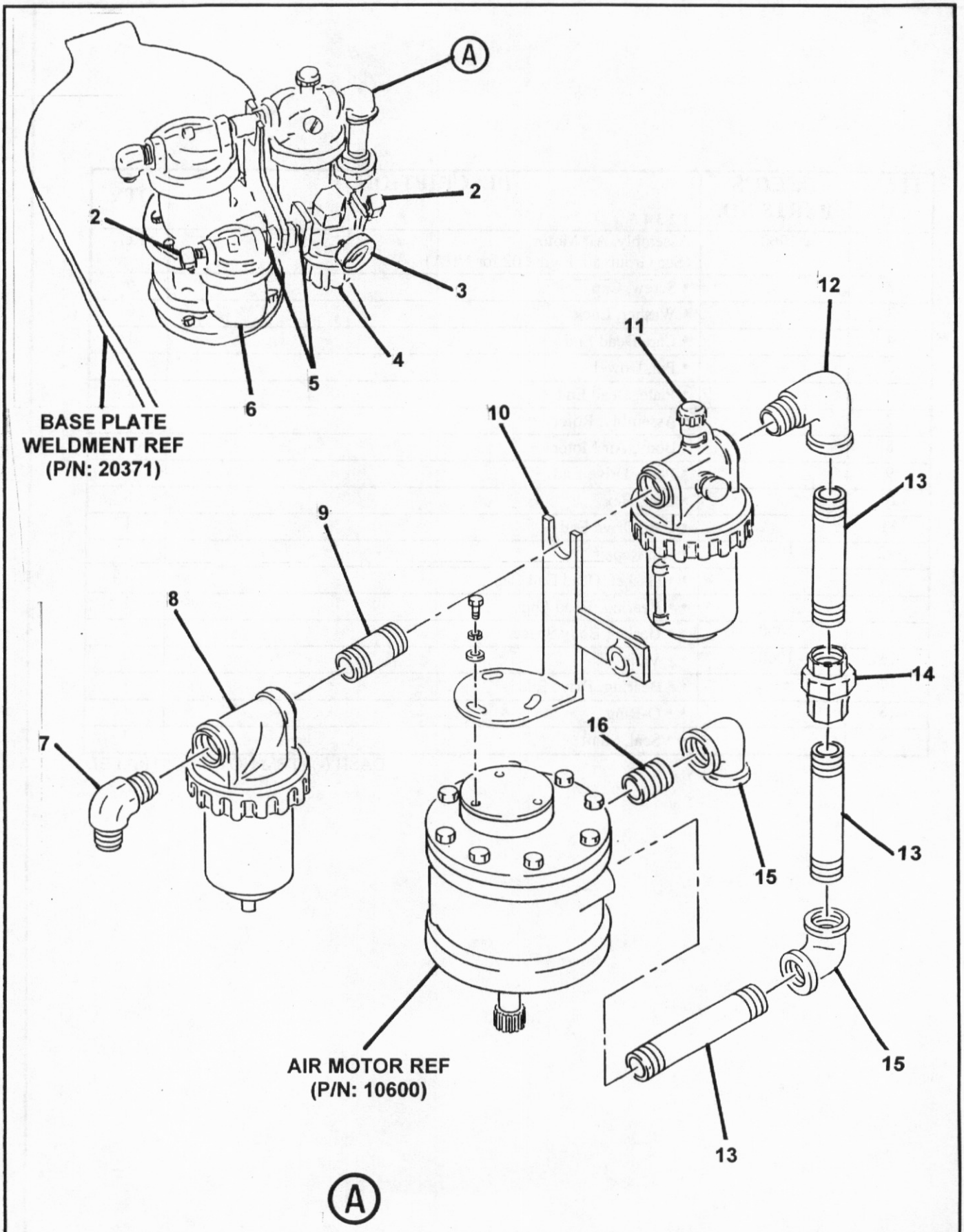

AIR LUBRICATOR AND FILTER SUB-ASSEMBLY

ITEM NO.	*REED*'S PARTS NO.	DESCRIPTION 1 2 3 4 5	QTY
-1	50-04	Sub-Assembly, Air Lubricator and Filter (See Group 50, Figure 01 for NHA)	Ref
2		• Elbow, 90	2
3	13017	• Gauge, 0 – 160 PSI	1
4	13068	• Regulator, APC	1
5	10227	• Nipple, Close	2
6	20010	• Filter, Air	1
-6A	10311	• • Kit, Filter Repair	1
7		• Elbow, 90	1
8	10320	• Filter, Air Motor	1
9	10274	• Nipple	1
10	20340	• Weldment, Motor Mounting Bracket	
11	10322	• Assembly, Air Motor Lubricator (See Group 50, Figure 05 for DET)	1
12	10204	• Elbow, Street	1
13	20120	• Nipple	3
14	10271	• Union	1
15	10269	• Elbow, Street	2
16	10268	• Nipple, Close	1

DASH (-) ITEM NOT ILLUSTRATED

AIR MOTOR LUBRICATOR ASSEMBLY

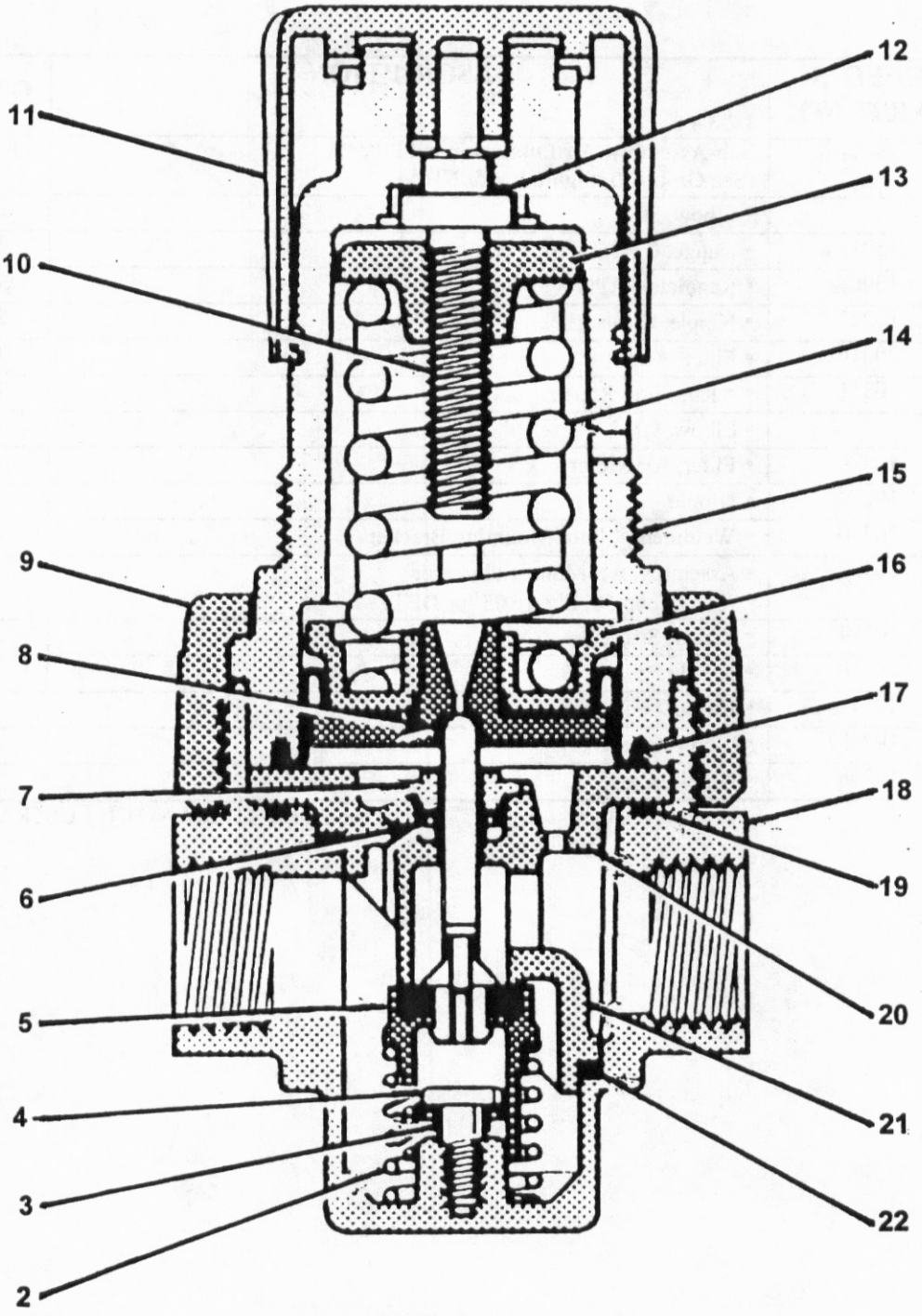

AIR MOTOR LUBRICATOR ASSEMBLY

ITEM NO.	*REED*'S PARTS NO.	DESCRIPTION 1 2 3 4 5	QTY
-1	10322	Assembly, Air Motor Lubricator (See Group 50, Figure 04 for NHA)	Ref
2		• Spring, Poppet Return	1
3		• Seal, Lip (Poppet Assembly to Cap)	1
4		• Retainer	1
5		• Assembly, Poppet	1
6		• Seal (Poppet Assembly to Body)	1
7		• Retainer, Lip Seal	1
8		• Seal, Vent	1
9		• Collar	1
10		• Screw, Adjusting	1
11		• Knob	1
12		• Washer	1
13		• Nut, Spring Guide	1
14		• Spring, Control	1
15		• Bonnet	1
16		• Plate	1
17		• Diaphragm	1
18		• Body	1
19		• O-Ring	1
20		• Plate	1
21		• Insert	1
22		• O-ring	1
23	10313	• Kit, Lubricator Repair	1

DASH (-) ITEM NOT ILLUSTRATED

REED
CONCRETE PLACING EQUIPMENT

AIR INLET SUB-ASSEMBLY

PARTS
GROUP 50
FIGURE 06
PAGE 01

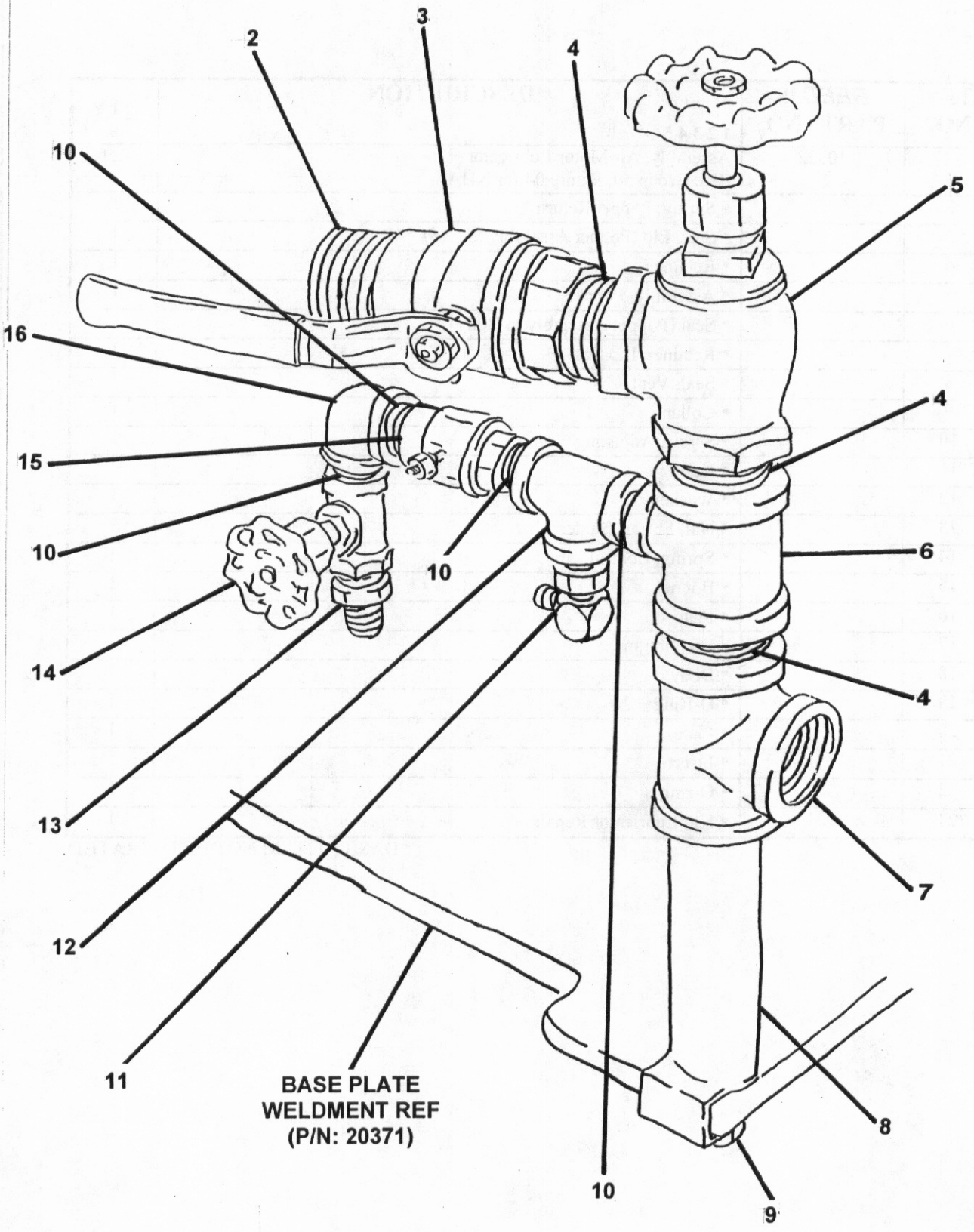

REVISION:

AIR INLET SUB-ASSEMBLY

ITEM NO.	*REED*'S PARTS NO.	DESCRIPTION 1 2 3 4 5	QTY
-1	50-0?	Sub-Assembly, Air Inlet (See Group 50, Figure 01 for NHA)	Ref
2	10266	• Nipple, Close	1
3	10290	• Valve, Air Control	1
4	10265	• Nipple, Close	3
5	10295	• Valve, Brass Angle	1
6	10205	• Tee	1
7	10299	• Tee	1
8	10002	• Weldment, Air Inlet Support	1
9		• Bolt, Hex	1
10	10268	• Nipple, Close	4
11		• Elbow, 90	1
12	10505	• Tee	1
13		• Fitting, STR	1
14	30438	• Valve, Needle	1
15	10270	• Valve, Ball	1
16	10269	• Elbow, Street	1

DASH (-) ITEM NOT ILLUSTRATED

THIS PAGE INTENTIONALLY LEFT BLANK.

REED *PNEUMATIC SPRAYING MACHINE* **MODEL *209* ILLUSTRATED PARTS MANUAL GROUP 60 ACCESSORIES INSTALLATION** CONTAINS THE FOLLOWING FIGURES:

FIGURE 00 TABLE OF CONTENTS
FIGURE 01 ACCESSORIES INSTALLATION
FIGURE 02 DUSTBAG ASSEMBLY

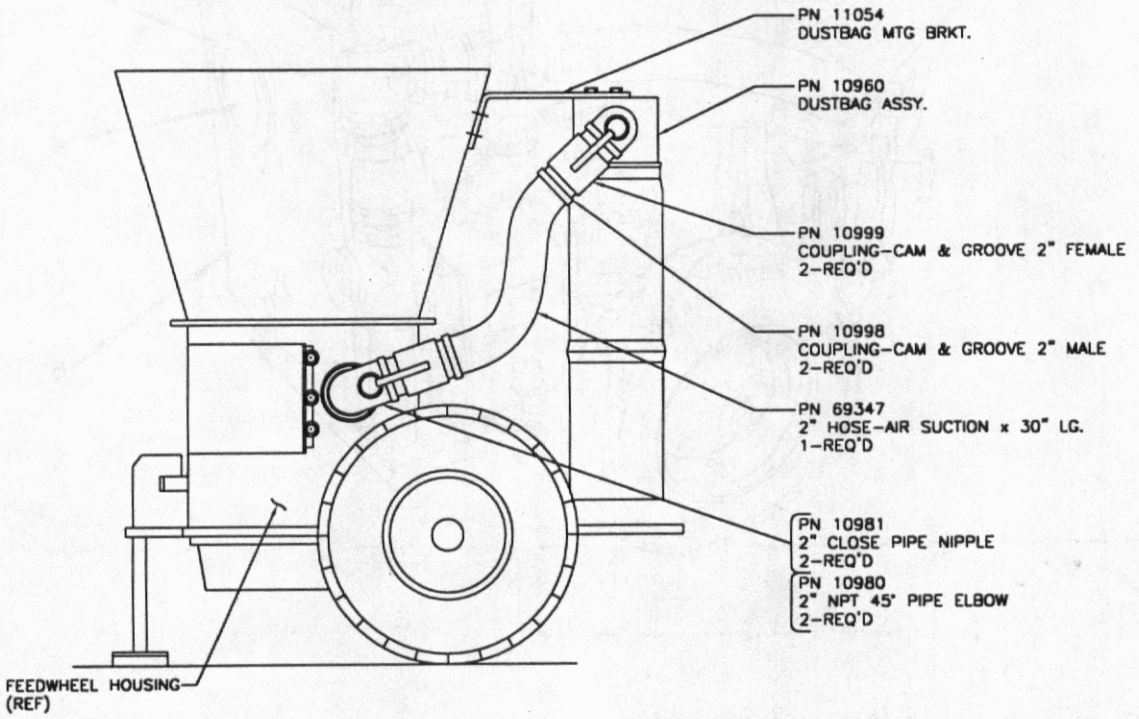

ACCESORIES INSTALLATION

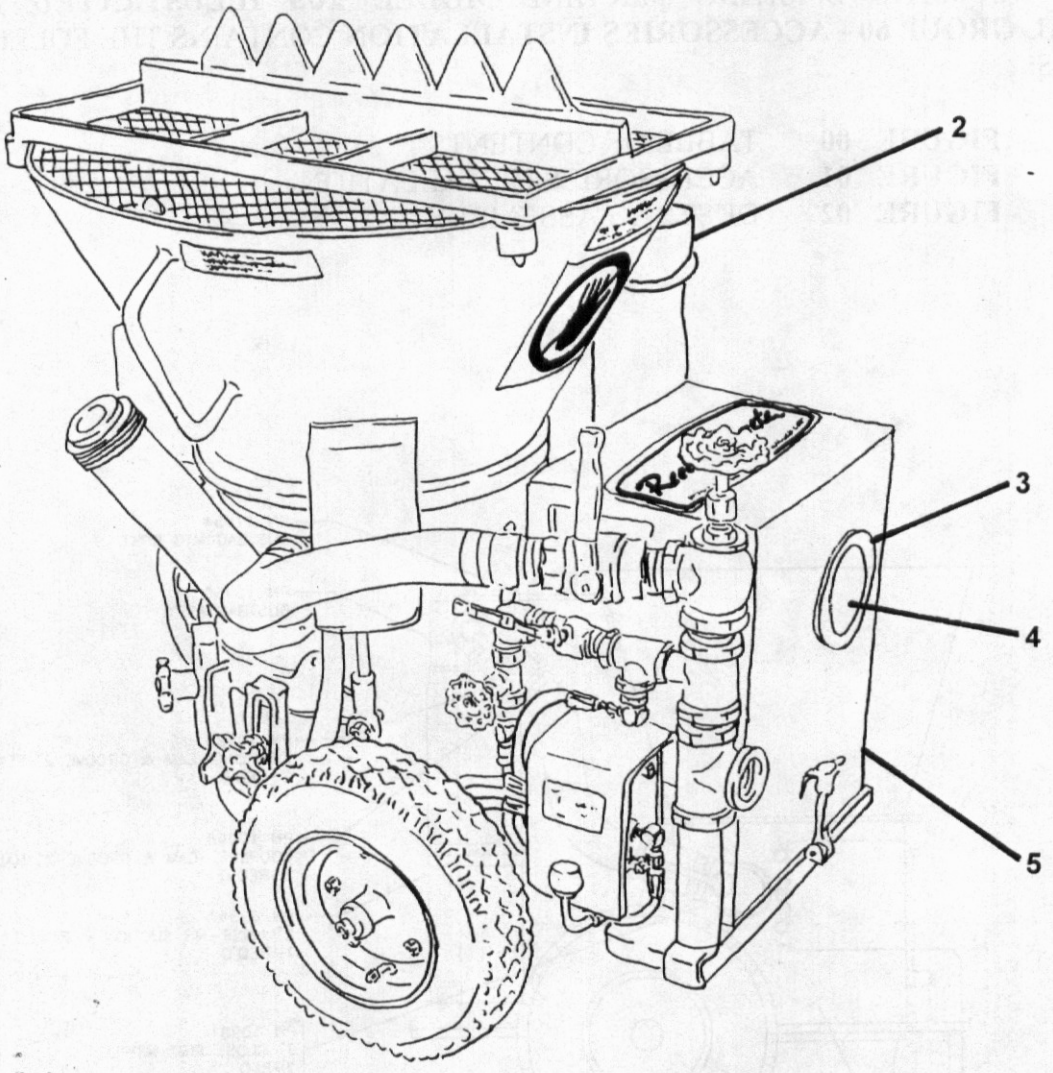

ACCESSORIES INSTALLATION

ITEM NO.	*REED*'S PARTS NO.	DESCRIPTION 1 2 3 4 5	QTY
-1	60-01	Installation, Accessories (See Group 10, Figure 01 for NHA)	Ref
2	20224	• Assembly, Dustbag (See Group 60, Figure 02 for DET)	1
3	10195	• Strip, Weather 16 Inch	1
4	10150	• Disc-Acrylic Clear Polished	1
5	20349	• Assembly, Final Cover	1

DASH (-) ITEM NOT ILLUSTRATED



REED
CONCRETE PLACING EQUIPMENT

DUSTBAG ASSEMBLY

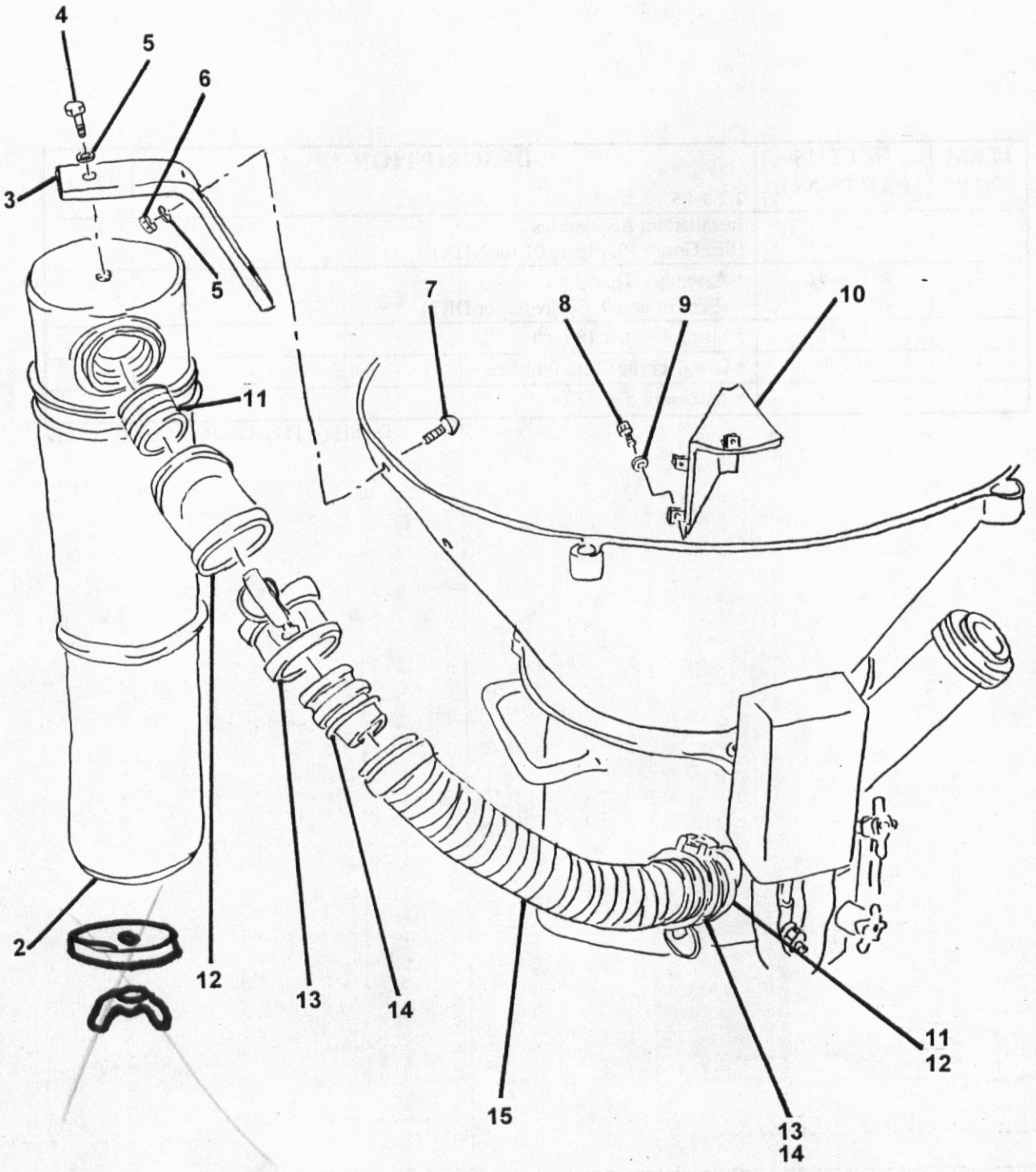

DUSTBAG ASSEMBLY

ITEM NO.	*REED*'S PARTS NO.	DESCRIPTION 1 2 3 4 5	QTY
-1	20224	Installation, Dustbag and Support (See Group 60, Figure 01 for NHA)	Ref
2	10960	• Sub-Assembly, Dustbag	1
3	11054	• Bracket, Dustbag Mounting	1
4		• Bolt, Hex	1
5		• Washer, Flat	3
6		• Nut, Hex	2
7		• Screw, Flat	2
8		• Bolt, Hex	3
9		• Washer, Flat	3
10	20227	• Weldment, Dustbag	1
11	10981	• Nipple, Close Pipe	2
12	10980	• Elbow, 45	2
13	10998	• Coupling, Male	2
14	10999	• Coupling, Female	2
15	69347	• Hose, Air Suction	1

DASH (-) ITEM NOT ILLUSTRATED

THIS PAGE INTENTIONALLY LEFT BLANK.

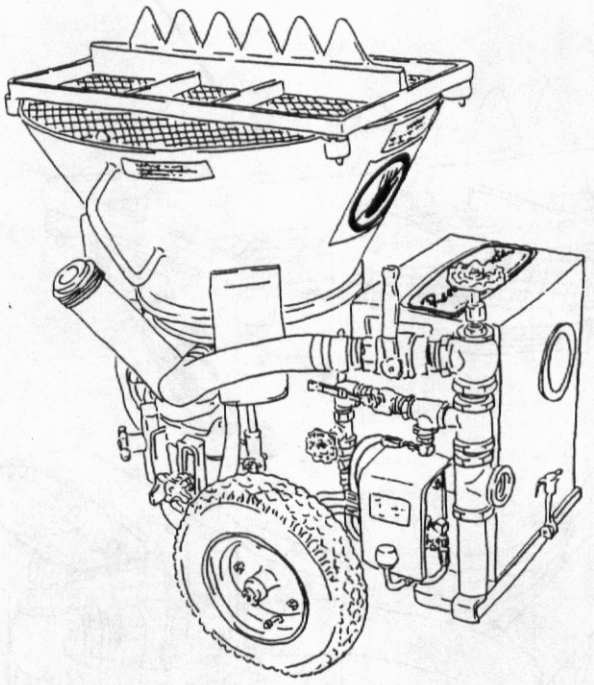

REED *PNEUMATIC SPRAYING MACHINE* **MODEL *209* ILLUSTRATED PARTS MANUAL GROUP 70 OPTIONAL INSTALLATION** CONTAINS THE FOLLOWING FIGURES:

FIGURE 00 TABLE OF CONTENTS
FIGURE 01 OPTIONAL INSTALLATION
FIGURE 02 1.5 INCH COARSE THREAD PAD BACKUP ASSEMBLY
FIGURE 03 1.25 INCH COARSE THREAD PAD BACKUP ASSEMBLY

OPTIONAL INSTALLATION

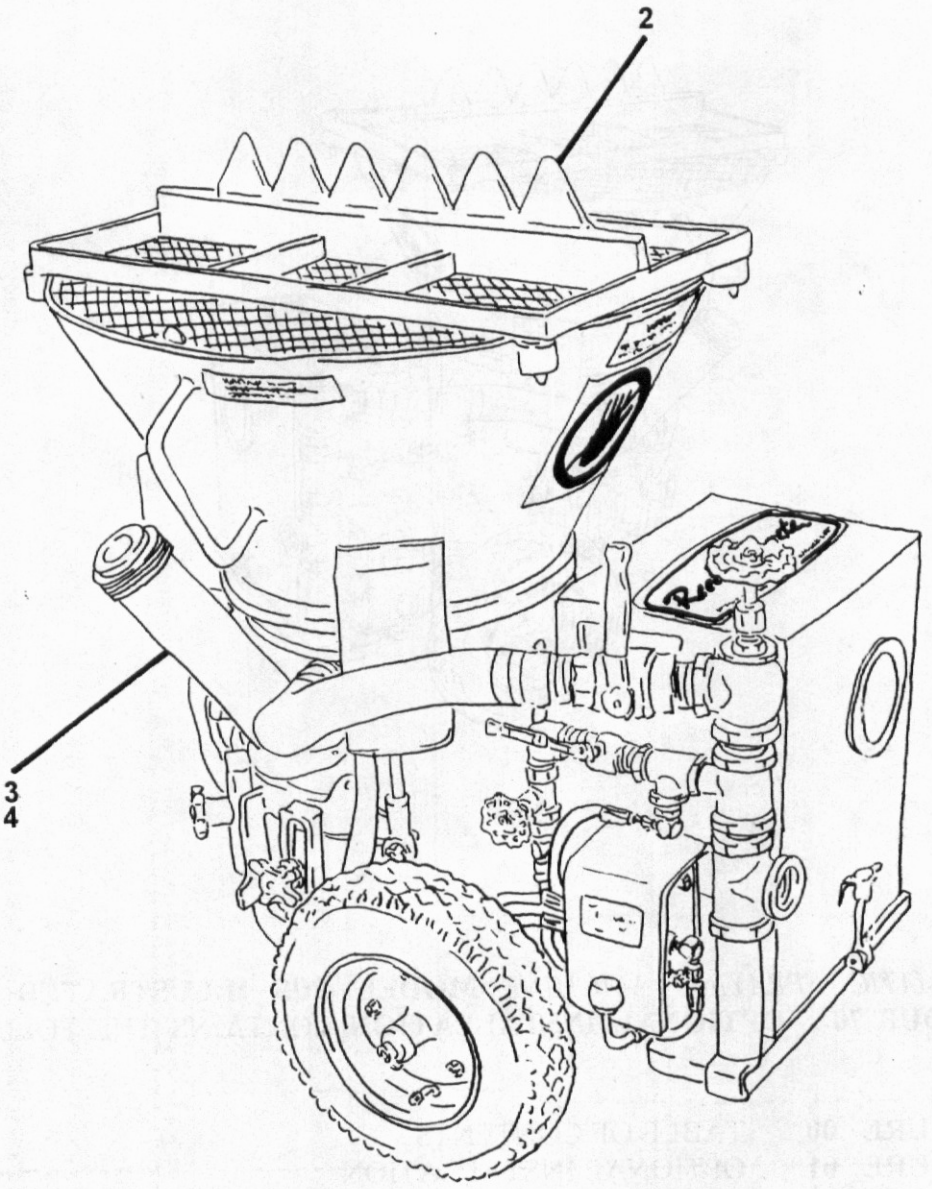

ITEM NO.	*REED*'S PARTS NO.	DESCRIPTION 1 2 3 4 5	QTY
-1	70-01	Installation, Optional (See Group 10, Figure 01 for NHA)	Ref
2	10939	• Weldment, Bag Breaker	1
3	20367	• Assembly, 1.5 Inch Coarse Thread Pad Backup (See Group 70, Figure 02 and for DET) (Also, See Group 40, Figure 01 for REF)	1
4	20366	• Assembly, 1.25 Inch Coarse Thread Pad Backup (See Group 70, Figure 03 and for DET) (Also, See Group 40, Figure 01 for REF)	1

DASH (-) ITEM NOT ILLUSTRATED

1.5 INCH COARSE THREAD PAD BACKUP ASSEMBLY

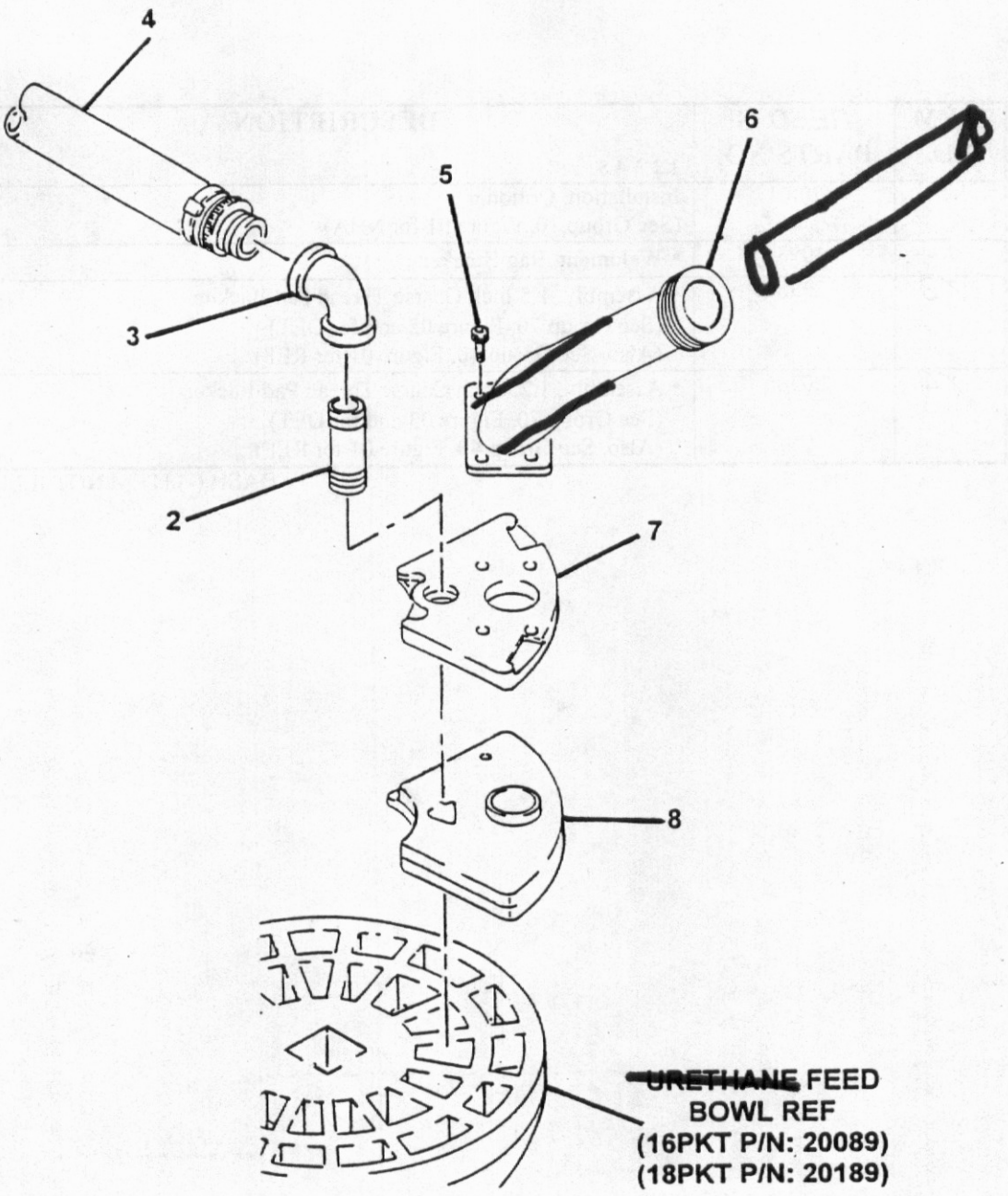

REVISION:

1.5 INCH COARSE THREAD PAD BACKUP ASSEMBLY

ITEM NO.	*REED*'S PARTS NO.	DESCRIPTION 1 2 3 4 5	QTY
-1	20367	Assembly, 1.5 Inch Coarse Thread Pad Backup (See Group 70, Figure 01 for NHA) (also See Group 40, Figure 01 for REF)	Ref
2	20144	• Nipple	1
3	20145	• Elbow, Reducer	1
4	10246	• Assembly, Crossover Hose	1
5	80270	• Screw, Phillister Head Shot	4
6	10044	• Weldment, 1.5 Inch Solid Casting Goose Neck	1
7	20092	• Plate, Pad Backup	1
8	20090	• Wearpad, Rubber	1

DASH (-) ITEM NOT ILLUSTRATED

REVISION:

REED
CONCRETE PLACING EQUIPMENT

1.25 INCH COARSE THREAD PAD BACKUP ASSEMBLY

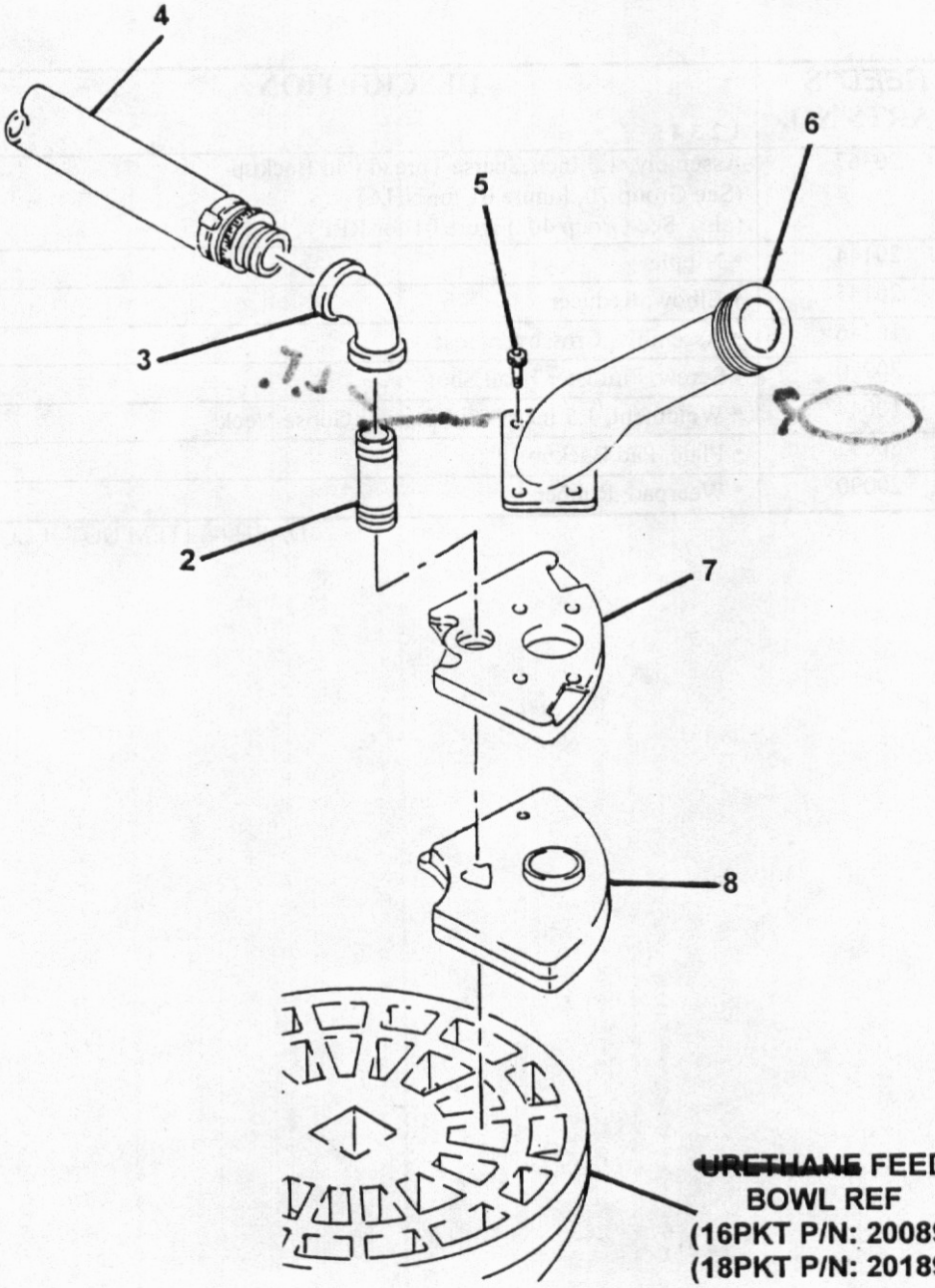

REVISION:

1.25 INCH COARSE THREAD PAD BACKUP ASSEMBLY

ITEM NO.	*REED*'S PARTS NO.	DESCRIPTION 1 2 3 4 5	QTY
-1	20366	Assembly, 1.25 Inch Coarse Thread Pad Backup (See Group 70, Figure 01 for NHA) (also See Group 40, Figure 01 for REF)	Ref
2	20144	• Nipple	1
3	20145	• Elbow, Reducer	1
4	10246	• Assembly, Crossover Hose	1
5	80270	• Screw, Phillister Head Shot	4
6	10043	• Weldment, 1.25 Inch Solid Casting Goose Neck	1
7	20092	• Plate, Pad Backup	1
8	20090	• Wearpad, Rubber	1

DASH (-) ITEM NOT ILLUSTRATED

THIS PAGE INTENTIONALLY LEFT BLANK.

REED

GUNITE ACCESSORY CATALOG
TOOLS, SUPPLIES, AND PARTS

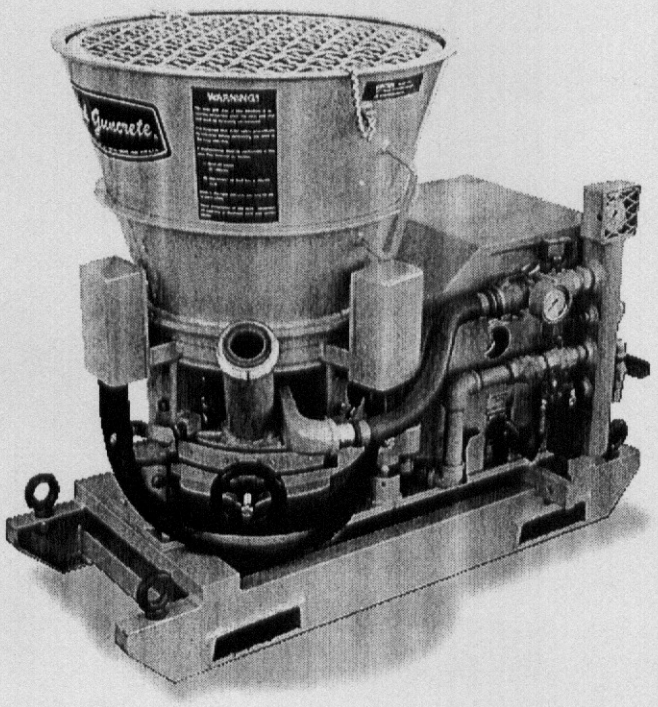

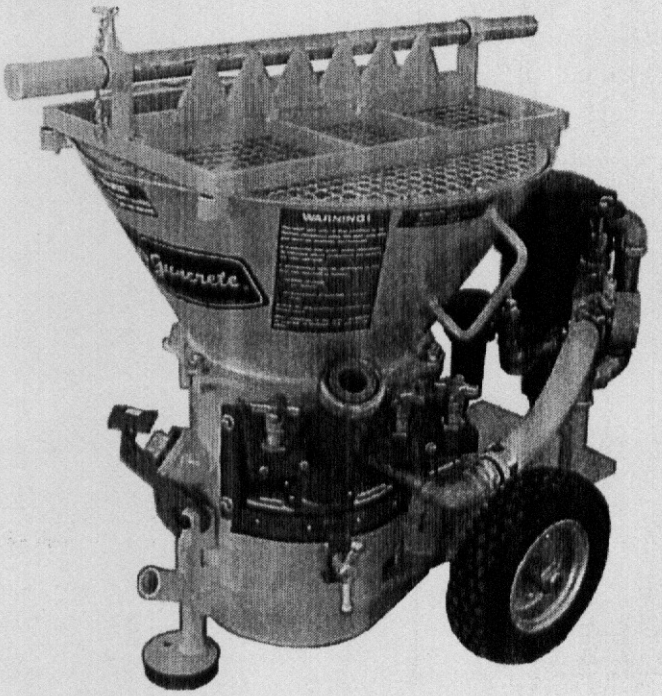

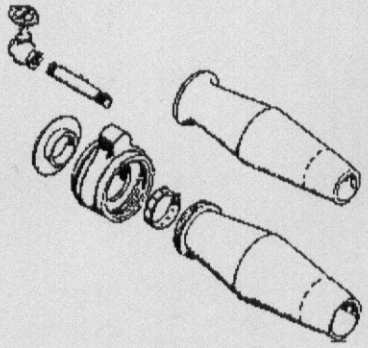

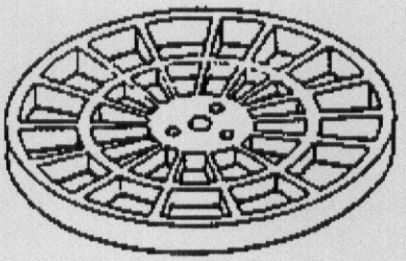

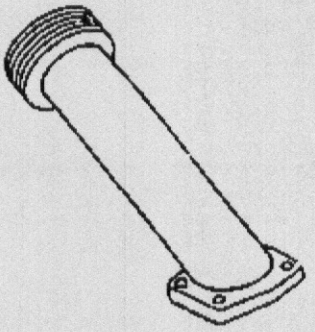

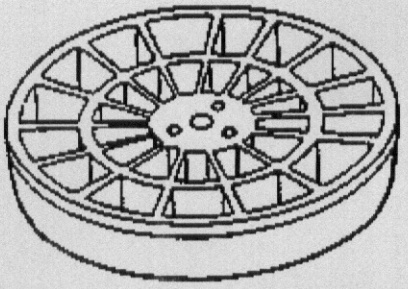

REED, *Technical Publications* • A Member of the Shea Family of Companies
13822 Oaks Avenue • Chino, California 91710-7008 • USA
Phone 909-287-2100 • Fax 909-287-2140

REED

TABLE OF CONTENTS

TERMS AND CONDITIONS.....2

LIMITED WARRANTY.....3

GUNITE HOSE.....4

COUPLING ASSEMBLIES AND ADAPTERS.....5

NOZZLE ASSEMBLIES.....7

GUNITE TOOLS AND SUPPLIES

- RIDLEY PARTS.....8
- SPIROLET NOZZLE.....8
- AIR/WATER HOSE.....8
- SHOOTING WIRE.....8
- CUTTING RODS, FRESNOS, TROWELS, FLOATS.....9
- BOOSTER PUMPS.....10

SAFETY DECALS.....11

RECOMMENDED SPARE PARTS

- LOVA/LOHE.....12
- LOVA/LOHE – SERIES IV.....14
- SOVA/SOVE.....16
- 209A/209E.....17
- 215A/215E.....18

LOVA 8 TO LOVA 16 CHANGEOVER.....19

TERMS AND CONDITIONS

PRICES, DESIGNS AND TERMS AND CONDITIONS OF SALE ARE SUBJECT TO CHANGE WITHOUT NOTICE.

ALL MATERIAL IS CAREFULLY EXAMINED, COUNTED, AND PACKED BY EXPERIENCED EMPLOYEES. CLAIMS FOR CORRECTIONS MUST BE MADE WITHIN 10 DAYS OF RECEIPT OF GOOD. OUR RESPONSIBILITY CEASES WHEN GOODS ARE DELIVERED TO CARRIER IN GOOD CONDITION AND ITS RECEIPT OBTAINED. CARRIERS ARE RESPONSIBLE FOR GOODS LOST, DAMAGED, OR DELAYED IN TRANSIT. FOR YOUR OWN PROTECTION, HAVE TRANSPORTATION COMPANY'S AGENT VERIFY DAMAGES, SHORTAGES, OR DELAYS AND NOTE THEM ON FREIGHT BILL OVER HIS SIGNATURE.

- ALL WEIGHTS ARE APPROXIMATE SHIPPING WEIGHTS AND SUBJECT TO CHANGE WITHOUT NOTICE.
- PRICES ARE SUBJECT TO CHANGE WITHOUT NOTICE. IN ACCORDANCE WITH OUR ESTABLISHED POLICY OF CONSTANT IMPROVEMENT, WE RESERVE THE RIGHT TO AMEND OUR SPECIFICATIONS AT ANY TIME WITHOUT NOTICE.
- ALL PRICES ARE F.O.B. SHIPPING POINT WITH FREIGHT CHARGES COLLECT.
- GOODS MAY NOT BE RETURNED EXCEPT WITH PRIOR APPROVAL AND ISSUANCE OF RETURN GOODS AUTHORIZATION NUMBER FROM OUR FACTORY. A 15% RESTOCKING CHARGE WILL APPLY TO ALL GOODS RETURNED.

TO PLACE AN ORDER PLEASE CONTACT US AT:

13822 OAKS AVENUE
CHINO, CA 91710 U.S.A.

PHONE: 909-287-2106 OR 909-287-2112
TOLL FREE OUTSIDE CALIFORNIA: 888-779-***REED***

FAX: 909-287-2141

OR CONTACT YOUR LOCAL ***REED*** DEALER

REED

SPARE PARTS LIMITED

WARRANTY

REED warrants each of its replacement parts to be free of defects in material and workmanship under normal use and service for a period of sixty (60) days from date of delivery.

The warranty periods begins when the part is delivered to the initial buyer. Said warranty is void if the machine/parts is subject to misuse, neglect, accident or abuse.

REED'S obligation under this warranty is limited to correcting without charge, at its factory, any parts or parts thereof which shall be returned to its factory, transportation prepaid and upon ***REED'S*** examination proves to have been originally defective. Correction of such defects by repair or replacement shall constitute fulfillment of all obligations to the buyer. This warranty does not include labor or transportation charges unless specifically identified and authorized in writing by ***REED***. Nor does the warranty apply to any part upon which repairs or unauthorized alterations have been made.

This warranty does not apply to normal maintenance service or to normal replacement of certain parts which are subject to normal wear (such as feed bowls, wear plates, wear pads, liners, delivery systems, filters, wear rings, piston cups, etc.). ***REED*** makes no warranty in respect to trade accessories or outside vendor components, such being subject to the warranties of their respective manufacturers.

THIS IS A LIMITED WARRANTY AND IS IN LIEU OF ANY OTHER WARRANTIES, EXPRESSED OR IMPLIED, INCLUDING ANY WARRANTY OF MERCHANTABILITY OR FITNESS FOR A PARTICULAR PURPOSE. In no event shall ***REED*** be liable for incidental, general or consequential damages, loss or any expense directly or indirectly related and resulting from use or lack of use caused by delay in delivery, parts failure, or any other causes associated with the use of the part. No person, firm or corporation is authorized to assume for ***REED*** any other liability in connection with the sale of ***REED*** products.

REED

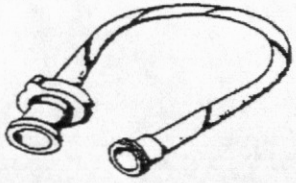

GUNITE MATERIAL HOSE

COUPLED "COARSE"	COUPLED "FINE"	NOT COUPLED	DESCRIPTION	I.D.(IN.)	O.D(IN.)	WGT./FT Lbs.
N/A	40521	40520	STATIC CONDUCTING WITH STURDY BLACK JACKET	0.75	1.44	0.60
N/A	40526	40525	STATIC CONDUCTING WITH STURDY BLACK JACKET	1	1.81	0.90
40532	40531	40530	STATIC CONDUCTING WITH STURDY BLACK JACKET	1.25	2.06	1.22
40537	40502	40535	STATIC CONDUCTING WITH STURDY BLACK JACKET	1.5	2.44	1.54
40452	N/A	40451	NON-STATIC CONDUCTING WITH TAN GUM RUBBER	2	2.94	1.91
40448	N/A	40449	STATIC CONDUCTING WITH TAN JACKET	2	2.94	1.91
40538	N/A	40489	STATIC CONDUCTING WITH TAN JACKET	2.5	3.47	2.38

Page 4

COUPLINGS AND ADAPTERS

CATEGORY	PART#	DESCRIPTION
COUPLING ASSEMBLIES 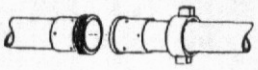	11007	2½" COUPLING ASSEMBLY – COARSE
	11006	2" COUPLING ASSEMBLY – COARSE
	11004	1½" COUPLING ASSEMBLY – FINE (2 3/8" O.D)
	11003	1½" COUPLING ASSEMBLY – FINE (2½" O.D.)
	11012	1½" COUPLING ASSEMBLY – COARSE (2 3/8" O.D.)
	11011	1½" COUPLING ASSEMBLY – COARSE (2½" O.D.)
	11002	1¼" COUPLING ASSEMBLY – FINE
	11010	1¼" COUPLING ASSEMBLY – COARSE
	11001	1" COUPLING ASSEMBLY – FINE
	11000	¾" COUPLING ASSEMBLY - FINE

CATEGORY	PART#	DESCRIPTION
HOSE ENDS 	11047	2½" MALE HOSE END – COARSE
	11046	2" MALE HOSE END – COARSE
	11043	1½" MALE HOSE END – FINE (2½" O.D.)
	11044	1½" MALE HOSE END – FINE (2 3/8" O.D.)
	11049	1½" MALE HOSE END – COARSE (2½" O.D.)
	11050	1½" MALE HOSE END – COARSE (2 3/8" O.D.)
	11042	1¼" MALE HOSE END – FINE
	11048	1¼" MALE HOSE END – COARSE
	11041	1" MALE HOSE END – FINE
	11040	¾" MALE HOSE END - FINE
	11022	2½" FEMALE HOSE END
	11021	2" FEMALE HOSE END

REED

COUPLINGS AND ADAPTERS

CATEGORY	PART#	DESCRIPTION
HOSE ENDS (CONT.) 	11018	1½" FEMALE HOSE END
	11019	1½" FEMALE HOSE END
	11023	1¼" FEMALE HOSE END – COARSE
	11017	1¼" FEMALE HOSE END – FINE
	11016	1" FEMALE HOSE END
	11015	¾" FEMALE HOSE END

CATEGORY	PART#	DESCRIPTION
COUPLING NUTS (NOT SHOWN)	11034	2½" COUPLING NUT – COARSE
	11033	2" COUPLING NUT – COARSE
	11031	1½" COUPLING NUT – FINE
	11037	1½" COUPLING NUT – COARSE
	11030	1¼" COUPLING NUT – FINE
	11036	1½" COUPLING NUT – COARSE

CATEGORY	PART#	DESCRIPTION
GOOSENECK ADAPTERS 	12085	1¼" COARSE TO 1¼" FINE (USED TO REDUCE DOWN TO 1" OR ¾" HOSE)
	12087	2" TO 2½" (USE TO INCREASE TO 2½" HOSE)
	12088	2" TO 1½" (USE TO REDUCE DOWN TO 1½")
	40078	1¼" TO 1½" (USE TO INCREASE TO 1½")

NOZZLE ASSEMBLIES AND ACCESSORIES

CATEGORY	PART#	DESCRIPTION
NOZZLE ASSEMBLIES 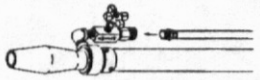	12006	2½" NOZZLE ASSEMBLY – STANDARD – COARSE
	12005	2" NOZZLE ASSEMBLY – STANDARD – COARSE
	12003	1½" NOZZLE ASSEMBLY – STANDARD – FINE
	12010	1½" NOZZLE ASSEMBLY – STANDARD – COARSE
	12002	1¼" NOZZLE ASSEMBLY – STANDARD - FINE
	12009	1¼" NOZZLE ASSEMBLY – STANDARD - COARSE
	11980	2" HYDRO NOZZLE ASSEMBLY – MINE VERSION – (10 FOOT), COARSE
	40539	2" HYDRO NOZZLE ASSEMBLY – COARSE
	12036	1½" HYDRO NOZZLE ASSEMBLY - COARSE
	11981	1¼" HYDRO NOZZLE ASSEMBLY - COARSE
	12001	1" NOZZLE ASSEMBLY – FINE
	12000	¾" NOZZLE ASSEMBLY - FINE
	11801	1" LANCE NOZZLE ASSEMBLY – FINE
	11800	¾" LANCE NOZZLE ASSEMBLY – FINE
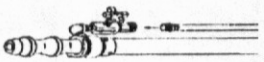	12017	1½" DOUBLE BUBBLE NOZZLE ASSEMBLY – FINE
	12022	1½" DOUBLE BUBBLE NOZZLE ASSEMBLY – COARSE
	12016	1¼" DOUBLE BUBBLE NOZZLE ASSEMBLY – FINE
	12021	1¼" DOUBLE BUBBLE NOZZLE ASSEMBLY – COARSE
	12078	1½" DOUBLE BUBBLE HYDRO NOZZLE ASSEMBLY – COARSE

GUNITE TOOLS AND SUPPLIES

CATEGORY	PART#	DESCRIPTION
RIDLEY PARTS 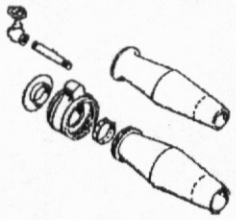	40800	2" BACK UP WASHER
	40810	2" BLUE GOOSENECK LINER
	40815	2" STEEL COUPLING
	40820	2" NOZZLE TIP – SHORT
	40830	2" NOZZLE LINER – SHORT
	40840	2" NOZZLE BODY
	40850	2" WATER RING
CATEGORY	**PART#**	**DESCRIPTION**
SPIROLET NOZZLE 	40821	2" NOZZLE TIP
	(OTHER SIZES AND ASSEMBLIES AVAILABLE UPON REQUEST)	
CATEGORY	**PART#**	**DESCRIPTION**
AIR HOSE	40591	2" X 50' COUPLED WITH DIXON BOSS FITTINGS – 150 PSI
	40593	1½" X 50' COUPLED WITH DIXON BOSS FITTINGS – 150 PSI
CATEGORY	**PART#**	**DESCRIPTION**
WATER/AIR HOSE	40590	¾" X 50' COUPLED WITH BRASS WATER FITTINGS – 150 PSI
	40589	¾" WATER COUPLINGS (LONG STEM)
CATEGORY	**PART#**	**DESCRIPTION**
SHOOTING WIRE	40600	.0348 SHOOTING WIRE (SOLD BY THE POUND) (AVERAGE WEIGHT PER ROLL – 46-48 LBS)
	40601	16½ GAUGE TIE WIRE (3.5 LBS ROLL)

GUNITE TOOLS AND SUPPLIES

CATEGORY	PART#	DESCRIPTION
GUNITE TOOLS	40615	24" GUNITE CUTTING ROD
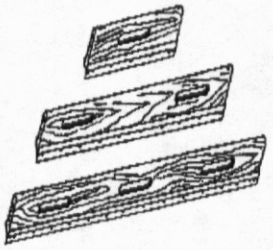	40620	36" GUNITE CUTTING ROD
	40625	48" GUNITE CUTTING ROD
	40635	24" STRAIGHT FRESNO – SQUARE ENDS
	40640	24" STRAIGHT FRESNO – ROUND ENDS
	40645	24" CURVED FRESNO – STRAIGHT ENDS
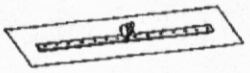	40650	24" CURVED FRESNO – ROUND ENDS
	40655	30" STRAIGHT FRESNO – STRAIGHT ENDS
	40660	30" STRAIGHT FRESNO – ROUND ENDS
	40665	30" CURVED FRESNO – STRAIGHT ENDS
	40670	30" CURVED FRESNO – ROUND ENDS
	40675	6' WOOD FRESNO HANDLE
	40680	12" X 5" METAL FINISHING TROWEL
	40685	12" X 4" METAL FINISHING TROWEL
	40690	5" X 2" MARGIN TROWEL
	40695	12" X 4" WOOD FLOAT
	40700	14" X 4" WOOD FLOAT
	40705	16" X 3½" WOOD FLOAT

BOOSTER PUMPS

CATEGORY	PART#	DESCRIPTION
AIR DRIVEN 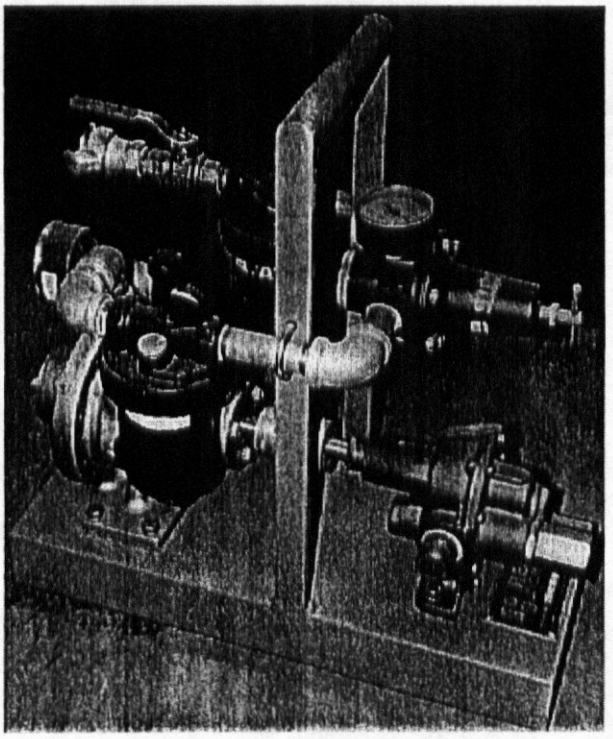	4025	ROTARY GEAR, POSITIVE DISPLACEMENT PUMP, MAXIMUM DISCHARGE PRESSURE: 120 PSI (8.3 BAR), MAXIMUM SUCTION LIFT: 20 FEET (6M), ADJUSTABLE DISCHARGE PRESSURE RELIEF, PIPE SIZE: ¾" (19mm) USED PRIMARILY IN GUNNING APPLICATIONS TO PROVIDE STABLE WATER PRESSURE AT NOZZLE.
ELECTRIC DRIVEN 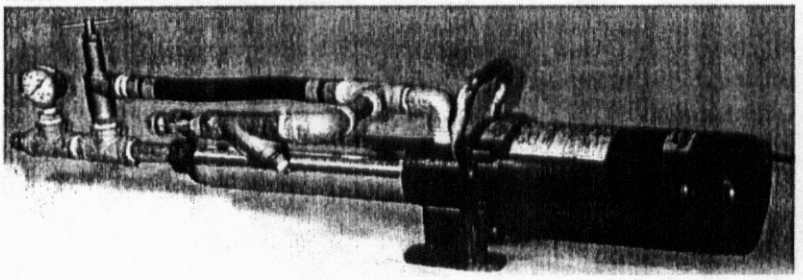		MODEL BP250, PRESSURE TO 250 PSI (17.5 BAR), CAPACITIES TO 8 GPM (30.3 LPM), POWER SOURCE: ELECTRIC STANDARD, 115 OR 230 VOLT/60Hz, 1 PHASE, BY-PASS PRESSURE RELIEF VALVE ASSEMBLY, PIPE SIZE: ¾" NPT

SAFETY DECALS

CATEGORY	PART#	QTY	DESCRIPTION
	10838	2	WARNING – SAFETY GLASSES
	10833	2	REED GUNCRETE
	10839	1	WARNING WEAR PAD
	10840	1	WARNING – INSIDE HOPPER
	10842	2	CAUTION – DO NOT LIFT HANDLES
	75005	2	NO HANDS SYMBOLS





RECOMMENDED SPARE PARTS - LOVA/LOHE

PART#	DESCRIPTION	QTY
10796	12 PKT W/DIVIDERS WEAR PLATE	2
10797	12 PKT W/DIVIDERS FEED BOWL	1
10336	WEAR PAD	60
10798	12 PKT DIVIDERLESS WEAR PLATE	2
10799	12 PKT DIVIDERLESS FEED BOWL	1
10336	WEAR PAD	60
10802	15 PKT LA WEAR PLATE	2
10803	15 PKT LA FEED BOWL	1
10336	WEAR PAD	60
10800	15 PKT STANDARD WEAR PLATE	2
10801	15 PKT STANDARD FEED BOWL	1
10338	WEAR PAD	60
10805	20 PKT WEAR PLATE	2
10806	20 PKT FEED BOWL	1
10338	WEAR PAD	60
10807	21 PKT WEAR PLATE	2
10808	21 PKT FEED BOWL	1
10339	WEAR PAD	60
10809	30 PKT FEED BOWL	1
10339	WEAR PAD	60
10042	1 1/2" L.T. GOOSENECK	1
10959	1 1/2" GOOSENECK LINER	5
10043	1 1/4" SOLID GOOSENECK	1
10044	1 1/2" SOLID GOOSENECK	1
10045	2" SOLID GOOSENECK	1
10046	2" L.T. GOOSENECK	1
10958	2" GOOSENECK LINER	5
10605	8AM AIR MOTOR REPAIR KIT	1
10606	16AM AIR MOTOR REPAIR KIT	1

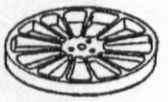

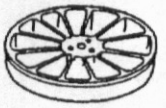

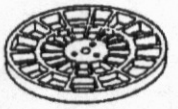

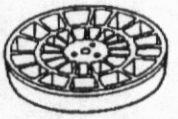





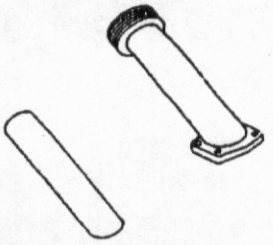

RECOMMENDED SPARE PARTS - LOVA/LOHE

PART#	DESCRIPTION	QTY
10825	RISER PLATE - MEDIUM	2
10826	RISER PLATE - THICK	2
10827	RISER PLATE - THIN	2
10728	SPINDLE STUD	6
10005	FELT SEAL	5
10013	ROCK SHEAR - WIDE	1
10014	ROCK SHEAR - NARROW	1
	ADDITIONAL PARTS FOR LOHE	
10618	VARIABLE SPEED BELT (NORDGEAR MOTOR ASSEMBLY)	1
10102	VARIABLE SPEED BELT (BALDOR MOTOR)	1
	NOTE: WEAR PATE, FEED BOWL AND GOOSENECK WILL BE DETERMINED BY THE MACHNE SYSTEM SETUP.	







RECOMMENDED SPARE PARTS
LOVA/LOHE SERIES IV

PART#	DESCRIPTION	QTY
10796	12 PKT W/DIVIDERS WEAR PLATE	2
10797	12 PKT W/DIVIDERS FEED BOWL	1
10783	12 PKT ROTARY FEED WHEEL	1
10336	WEAR PAD	60
10798	12 PKT DIVIDERLESS WEAR PLATE	2
10799	12 PKT DIVIDERLESS FEED BOWL	1
10336	WEAR PAD	60
10802	15 PKT LA WEAR PLATE	2
10803	15 PKT LA FEED BOWL	1
10780	15 PKT LA ROTARY FEED WHEEL	1
10336	WEAR PAD	60
10800	15 PKT STANDARD WEAR PLATE	2
10801	15 PKT STANDARD FEED BOWL	1
10781	15 PKT STANDARD ROTARY FEED WHEEL	1
10338	WEAR PAD	60
10805	20 PKT WEAR PLATE	2
10806	20 PKT FEED BOWL	1
10779	20 PKT ROTARY FEED WHEEL	1
10338	WEAR PAD	60
10807	21 PKT WEAR PLATE	2
10808	21 PKT FEED BOWL	1
10778	21 PKT ROTARY FEED WHEEL	1
10339	WEAR PAD	60
10809	30 PKT FEED BOWL	1
10339	WEAR PAD	60
10042	1 1/2" L.T. GOOSENECK	1
10959	1 1/2" GOOSENECK LINER	5
10043	1 1/4" SOLID GOOSENECK	1
10044	1 1/2" SOLID GOOSENECK	1
10045	2" SOLID GOOSENECK	1

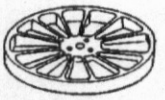

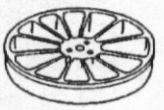

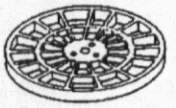

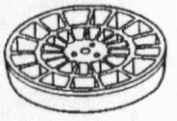





RECOMMENDED SPARE PARTS
LOVA/LOHE SERIES IV

PART#	DESCRIPTION	QTY
10046	2" L.T. GOOSENECK	1
10958	2" GOOSENECK LINER	5
10605	8AM AIR MOTOR REPAIR KIT	1
10606	16AM AIR MOTOR REPAIR KIT	1
10825	RISER PLATE - MEDIUM	2
10826	RISER PLATE - THICK	2
10827	RISER PLATE - THIN	2
10728	SPINDLE STUD	6
10005	FELT SEAL	5
10013	ROCK SHEAR - WIDE	1
10014	ROCK SHEAR - NARROW	1
	ADDITIONAL PARTS FOR LOHE	
10618	VARIABLE SPEED BELT (NORDGEAR MOTOR ASSEMBLY)	1
10102	VARIABLE SPEED BELT (BALDOR MOTOR)	1

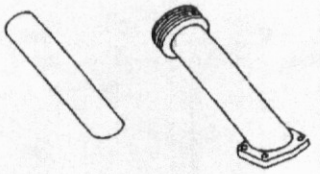











NOTE: WEAR PATE, FEED BOWL AND GOOSENECK WILL BE DETERMINED BY THE MACHNE SYSTEM SETUP.

RECOMMENDED SPARE PARTS - SOVA/SOVE

PART#	DESCRIPTION	QTY
20089	16 POCKET FEED BOWL	1
20189	18 POCKET FEED BOWL	1
20097	1 1/2" L.T. GOOSENECK	1
20086	1 1/2" GOOSENECK LINER	5
10044	1 1/2" SOLID GOOSENECK	1
10043	1 1/4" SOLID GOOSENECK	1
20090	WEAR PAD	50
20172	RISER PLATE - THIN	2
20173	RISER PLATE - MEDIUM	2
20174	RISER PLATE - THICK	2
20388	ROCK SHEAR	1
20158	FELT SEAL	5
10605	8AM AIR MOTOR REPAIR KIT	1
10618	VARIABLE SPEED BELT	1
	(ELECTRIC DRIVE ONLY)	1

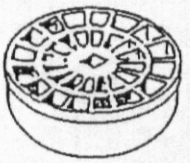

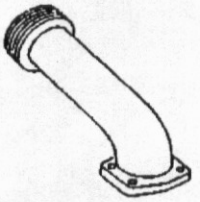







NOTE: **FEED BOWL AND GOOSENECK WILL BE DETERMINED BY THE MACHNE SYSTEM SETUP.**

RECOMMENDED SPARE PARTS - 209A/209E

PART#	DESCRIPTION	QTY
20089	16 POCKET FEED BOWL	1
20189	18 POCKET FEED BOWL	1
20097	1 1/2" L.T. GOOSENECK	1
20086	1 1/2" GOOSENECK LINER	5
10044	1 1/2" SOLID GOOSENECK	1
10043	1 1/4" SOLID GOOSENECK	1
20090	WEAR PAD	50
20172	RISER PLATE - THIN	2
20173	RISER PLATE - MEDIUM	2
20174	RISER PLATE - THICK	2
20388	ROCK SHEAR	1
20158	FELT SEAL	5
10965	DUST BAG	1
10605	8AM AIR MOTOR REPAIR KIT	1
10618	VARIABLE SPEED BELT	1
	(ELECTRIC DRIVE ONLY)	1

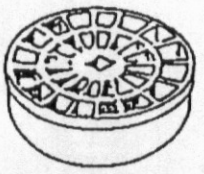

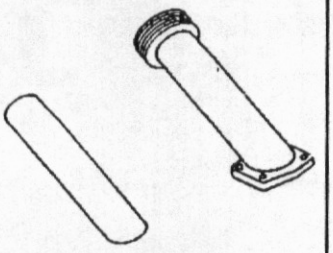



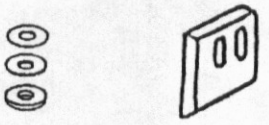

NOTE: **WEAR PATE, FEED BOWL AND GOOSENECK WILL BE DETERMINED BY THE MACHNE SYSTEM SETUP.**

RECOMMENDED SPARE PARTS - 215A/215E

PART#	DESCRIPTION	QTY
10780	15 PKT LA ROTARY FEED WHEEL	1
10333	WEAR PAD	60
10781	15 PKT STANDARD ROTARY FEED WHEEL	1
10334	WEAR PAD	60
10778	20 PKT ROTARY FEED WHEEL	1
10334	WEAR PAD	60
10783	12 PKT ROTARY FEED WHEEL	1
10333	WEAR PAD	60
10042	1 1/2" L.T. GOOSENECK	1
10959	1 1/2" GOOSENECK LINER	5
10043	1 1/4" SOLID GOOSENECK	1
10044	1 1/2" SOLID GOOSENECK	1
10045	2" SOLID GOOSENECK	1
10046	2" L.T. GOOSENECK	1
10958	2" GOOSENECK LINER	5
10323	DUST BAG	1
10325	DUST BAG CLAMP	1
10825	RISER PLATE - MEDIUM	2
10826	RISER PLATE - THICK	2
10827	RISER PLATE - THIN	2
10728	SPINDLE STUD	6
13011	FELT SEAL	5
10606	16AM AIR MOTOR REPAIR KIT	1
13223	ROCK SHEAR - WIDE	1
13224	ROCK SHEAR - NARROW	1
10618	VARIABLE SPEED BELT (ELECTRIC DRIVE ONLY)	1




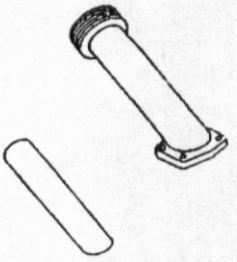

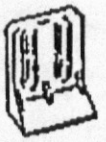

NOTE: WEAR PATE, FEED BOWL AND GOOSENECK WILL BE DETERMINED BY THE MACHNE SYSTEM SETUP.

LOVA 8 TO LOVA 16 CHANGEOVER

PART#	DESCRIPTION	QTY
10603	16AM AIR MOTOR	1
10035	16AM ADAPTER PLATE	1
10036	16AM GASKET	1
10345	MUFFLER WELDMENT	1
10304	1 1/4" X 90 DEGREE ELBOW	1
10265	1 1/4" NIPPLE	1
10344	LOCKWASHER	1
10088	16AM AIR INLET ASSEMBLY	1
NPN	1 X 3/8" DOWEL PIN	2
NPN	1 X 1/16" HEX SCREW	4

REED *PNEUMATIC SPRAYING MACHINE* **MODEL *209* VENDOR SECTION** CONTAINS THE FOLLOWING FIGURES:

FIGURE 00 TABLE OF CONTENTS
FIGURE 01 GAST AIR MOTOR
FIGURE 02 WATTS AIR FILTER AND LUBRICATOR

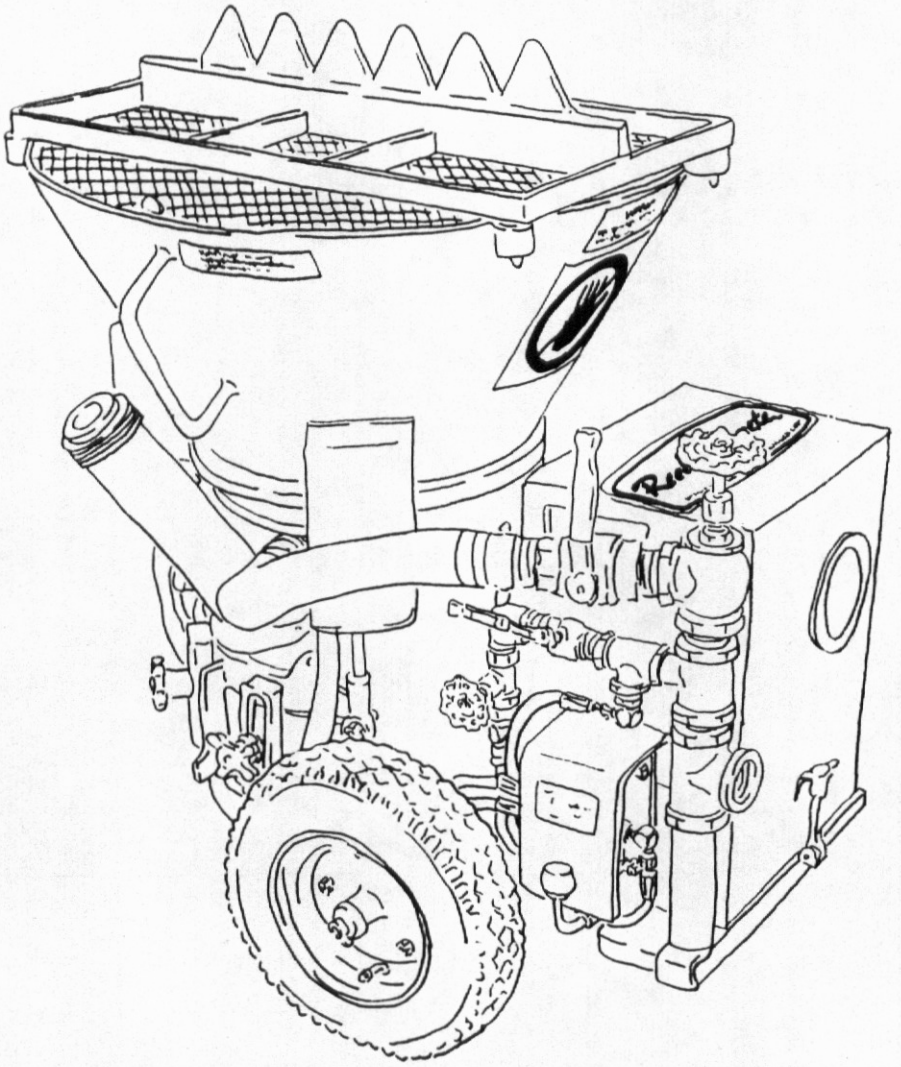

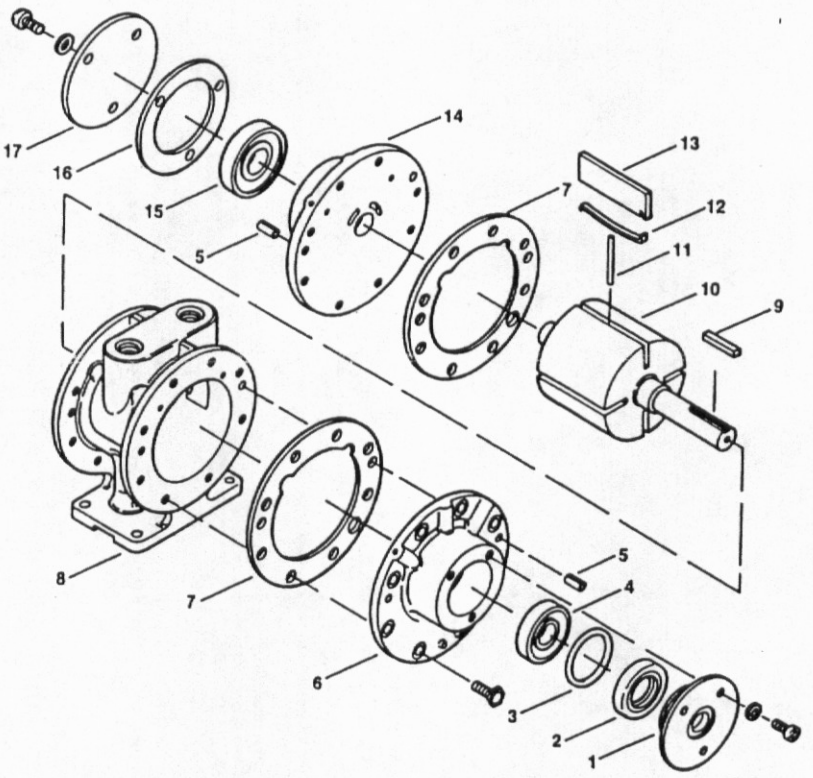

GAST®

6AM, 8AM, and 16AM LUBRICATED AIR MOTORS OPERATION & MAINTENANCE TECHNICAL MANUAL

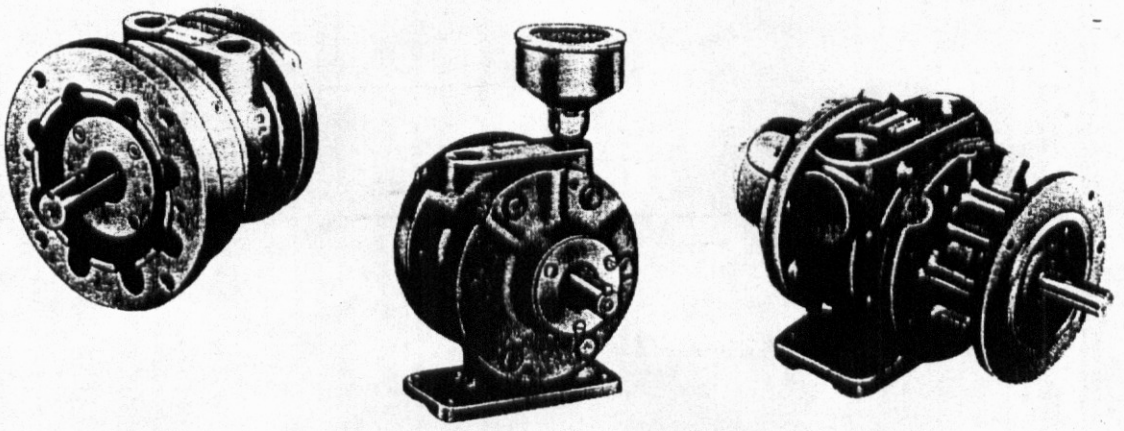

REVISION:

LUBRICATED AIR MOTORS

OPERATION & MAINTENANCE MANUAL

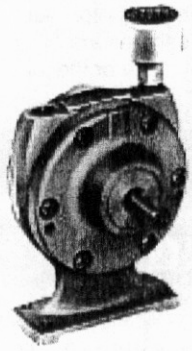

Model 2AM Shown

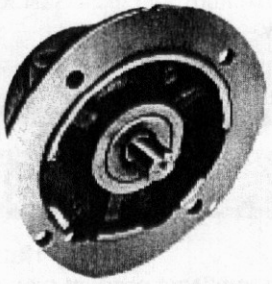

Model 4AM Shown

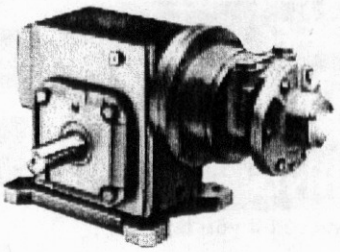

Model 6AM Shown

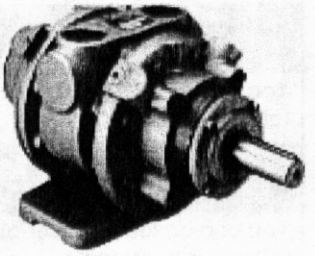

Model 16AM Shown

Thank you for purchasing this Gast product. It is manufactured to the highest standards using quality materials. Please follow all recommended maintenance, operational and safety instructions and you will receive years of trouble free service.

IMPORTANT: PLEASE READ THIS MANUAL AND SAVE FOR FUTURE REFERENCE.

General information

- **Clearances:**

Model	Total End Clearance (in/mm)	Top Clearance (in/mm)
1AM/1 UP	0.0020/0.0508	0.0015/0.0381
2AM	0.0025/0.0635	0.0015/0.0381
2AM *	0.0025/0.0635	0.0025/0.0635
4AM	0.0035/0.0889	0.0015/0.0381
4AM *	0.0035/0.0889	0.0025/0.0635
6AM	0.0035/0.0889	0.0015/0.0381
8AM	0.0048/0.1219	0.0015/0.0381
16AM	0.0060/0.1524	0.0015/0.0381

* Models with the last three digits greater than 500 (ie 2AM XXX-501)

- **Vane Life:** Depends upon speed, operating pressure and motor maintenance.
- **Operating Pressure:** 100 psi or below (7 bar)

Product Use Criteria:

- Operate at temperature up to 250°F (121°C).
- Protect unit from dirt and moisture.
- Use ONLY compressed air to drive motor.
- Air lines connected to motor should be the same size or the next size larger than the intake port for efficient output and speed control.
- Protect all surrounding items from exhaust air.
- Bearings are grease packed.
- Use Gast #AD220 or a detergent SAE#10 automotive engine oil for lubricating.

GAST
A Unit of IDEX Corporation

ISO 9001 & 14001 CERTIFIED

www.gastmfg.com

®Registered Trademark/™Trademark of Gast Manufacturing Inc., Copyright ©2001 Gast Manufacturing Inc. All Rights Reserved.

Your safety and the safety of others is extremely important.

We have provided many important safety messages in this manual and on your product. Always read and obey all safety messages.

 **This is the safety alert symbol. This symbol alerts you to hazards that can kill or hurt you and others. The safety alert symbol and the words "DANGER" and "WARNING" will precede all safety messages. These words mean:**

⚠ DANGER

You will be killed or seriously injured if you don't follow instructions.

⚠ WARNING

You can be killed or seriously injured if you don't follow instructions.

All safety messages will identify the hazard, tell you how to reduce the chance of injury, and tell you what can happen if the safety instructions are not followed.

INSTALLATION

Correct installation is your responsibility. Make sure you have the proper installation conditions and that the specified installation clearances are available.

⚠ WARNING

Injury Hazard

Install proper guards as needed.

Failure to follow this instruction can result in burns or other serious injury.

Mounting

This product can be installed in any orientation. Mount the motor to a solid base plate that is mounted to a stable, rigid operating surface. Install a pressure regulator or simple shut-off valve to control motor.

Connection

Check the direction of the motor airflow. A single rotation motor will operate properly only in one direction. Install a filter in the air line before the connection to the motor. Connect lines to motor in the proper direction. A reversible motor will work equally well in both directions. Connecting a 4-way valve with piping to both air ports of the motor will make reversing possible.

Do not add any thrust to the end or side of the shaft when making connections. Do not use a hammer on the shaft or connections.

Accessories

A muffler is shipped with the air motor (except 16AM) but is not installed. Consult your Gast representative for additional filter recommendations. Install a moisture trap and filter in the air line ahead of the motor. For the most efficient output and control of speed, use air lines that are the same size or the next pipe size larger than the motor intake port.

An automatic air line lubricator should be installed 18" or as close as possible in the air line just ahead of the motor. Adjust the lubricator to feed one drop of oil for every 50-75 CFM of air moving through the motor. Air consumption at various speeds and pressures are available from your local Gast representative or the factory.

OPERATION

⚠ WARNING

Injury Hazard

Air stream from product may contain solid or liquid material that can result in eye or skin damage.

Do Not use combustible gases to drive this motor.

Wear hearing protection. Sound level from motor may exceed 85db(A).

Failure to follow these instructions can result in burns, eye injury or other serious injury.

It is your responsibility to operate this product at recommended speeds, loads and room ambient temperatures. Do not run the motor at high speeds with no load. This will result in excessive internal heat that may cause motor damage.

The starting torque is less than the running torque. The starting torque will vary depending upon the position of the vanes when stopped in relation to the air intake port.

Use a pressure regulator and/or simple shut-off valve to regulate the motor's speed and torque. This will provide the required power and will conserve air.

MAINTENANCE

⚠ WARNING

Injury Hazard

Disconnect air supply and vent all air lines.

Wear eye protection when flushing this product.

Air stream from product may contain solid or liquid material that can result in eye or skin damage.

Flush this product in a well ventilated area.

Do Not use kerosene or other combustible solvents to flush this product.

Failure to follow these instructions can result in burns, eye injury or other serious injury.

It is your responsibility to regularly inspect and make necessary repairs to this product in order to maintain proper operation.

Lubrication

Use Gast #AD220 or a detergent SAE #10 automotive engine oil for lubricating. Lubricating is necessary to prevent rust on all moving parts. Excessive moisture in the air line may cause rust or ice to form in the muffler when air expands as it passes through the motor. Install a moisture separator in the air line and an after cooler between compressor and air receiver to help prevent moisture problems.

Manual Lubrication

Shut the air motor down and oil after every 8 hours of operation. Add 10-20 drops of oil to the air motor intake port.

Automatic Lubrication

Adjust inline oiler to feed 1 drop of oil per minute for high speed or continuous duty usage. Do Not overfeed oil or exhaust air may become contaminated.

Check intake and exhaust filters after first 500 hours of operation. Clean filters and determine how frequently filters should be checked during future operation. This one procedure will help assure the product's performance and service life.

Flushing

Flushing this product to remove excessive dirt, foreign particles, moisture or oil that occurs in the operating environment will help to maintain proper vane performance. Flush the motor if it is operating slowly or inefficiently.

Use only Gast #AH255B Flushing Solvent. DO NOT use kerosene or ANY other combustible solvents to flush this product.

1. Disconnect air line and muffler.
2. Add flushing solvent directly into motor. If using liquid solvent, pour several tablespoons directly into the intake port. If using Gast #AH255B, spray solvent for 5-10 seconds into intake port.
3. Rotate the shaft by hand in both directions for a few minutes.
4. **You must wear eye protection for this step.** Cover exhaust with a cloth and reconnect the air line. Slowly apply pressure until there is no trace of solvent in the exhaust air.
5. Listen for changes in the sound of the motor. If motor sounds smooth, you are finished. If motor does not sound like it is running smoothly, installing a service kit will be required. (See "Service Kit Installation").

Check that all external accessories such as relief valves or gauges are attached and are not damaged before operating product.

Shutdown

It is your responsibility to follow proper shutdown procedures to prevent product damage.

1. Turn off air intake supply.
2. Disconnect plumbing.
3. Remove air motor from connected machinery.
4. **Wear eye protection.** Keep away from air stream.
   Use clean, dry air to remove condensation.
5. Lubricate motor with a small amount of oil in chamber. Rotate shaft by hand several times.
6. Plug or cap each port.
7. Coat output shaft with oil or grease.
8. Store motor in a dry environment.

SERVICE KIT INSTALLATION

Gast will NOT guarantee field-rebuilt product performance. For performance guarantee, the product must be returned to a Gast authorized service facility.

Service kit contents vary. Most contain vanes, end cap gasket, body gasket, bearings and a muffler element or felt.

Major and Minor Rebuilds

Tool kits which include a more in-depth rebuild manual are available through your Gast distributor. These kits include the tools required to remove and reassemble end plates, bearings and shaft seals, and to set the proper end clearance. The rebuild manual also includes step by step instructions, including illustrations, to help achieve a successful rebuild. Gast Manufacturing, Inc. highly recommends using the air motor rebuild manual and tool kit when attempting a minor or major rebuild to your Gast air motor.

Minor Rebuild:

1. Remove the end cap.
2. Remove dead end plate bolts.
3. Remove dead end plate. (Use factory issued tool, do not use screwdriver to remove the end plate.
4. Remove the dowel pins from the body and push back into end plate until flush or just below the machined surface of the end plate.
5. Remove vanes.
6. Clean parts. Check for scoring on the end plate and rotor assembly. If scoring exists, send unit to a Gast authorized service facility.
7. **Lubricated models only:** Lightly oil and reinstall vanes.
8. Place the proper end plate gasket on the end plate. If the original is damaged, replace with a new one supplied in the Service Kit.
9. Place the dead end plate on the body.
10. Press the bearing onto the shaft using a factory supplied bearing pusher.
11. Tap dowel pins into body and install end plate bolts. Tighten bolts to 75-100 in-lbs.
12. Set end clearance as required by model:
    1AM-4AM and NL22-NL52 models - use the bearing taper from kit to lightly tap on inner race of the dead end bearing to free up and center the rotor in the body.
    6AM-8AM models - lightly strike the drive end shaft with a soft hammer to push the rotor away from the drive end plate. The rotor must NOT rub on either end plate.
13. Reattach end cap.
14. **If the air motor is lubricated**, apply a few drops of Gast #AD220 lubricant into ports. Rotate shaft by hand for a few rotations.

Major Rebuild:

1. Remove the end cap.
2. Remove dead end plate bolts.

3. Remove dead end plate. (Use factory issued tool, do not use screwdriver to remove the end plate.)
4. Remove the dowel pins from the body and push back into end plate until flush or just below the machined surface of the dead end plate.
5. Remove rotor using an arbor press.
6. Remove vanes and ejection mechanism if reversible. (Ejection mechanisms may consist of vane springs, pins, caps or cam rings.)
7. Remove shaft seal and bearings from drive end plate and bearing from dead end plate. (Use factory issued tool.)
8. Do Not remove drive end plate bolts or drive end plate.
9. Clean parts. Check for scoring on the end plates and rotor assembly. If scoring exists, send unit to a Gast authorized service facility.
10. **For reversible models only:**
    1AM and 1UP models - place a new cam ring between the rotor and the drive end plate.
    2AM and 4AM models - place springs and caps in rotor.
    6AM, 8AM and 16AM models - install push pins.
11. Place the drive shaft of the rotor assembly through the drive end plate. Press the drive bearing onto the drive shaft using a factory supplied bearing pusher.
12. Using the bearing taper from the Tool Kit, lightly tap on inner race of the drive end bearing to snug up rotor to drive end plate.
13. Install new vanes as required by model:
    All single rotation units - the angle cuts on the vane face to center of the rotor.
    Reversible units 2AM and 4AM - the notch on vane faces to center of the rotor.
    6AM, 8AM and 16AM models - install the vane spring lip into the notch at one end of the vane and place in rotor vane slot with spring facing pushpin.
14. Place the proper end plate gasket on the body of dead end. If the original is damaged, replace with a new one supplied in the service kit.
    If your air motor uses O-rings, place the new O-rings in the body groove. Some models do not use end plate gaskets or O-rings.
15. Place the dead end plate on the body.
16. Install the dead end bearing and press into place with bearing pusher tool from tool kit.
17. Install the dowel pins.
18. Fully tighten the remaining bolts to 75-100 in-lbs.
19. Set end clearance as required by model:
    1AM-4AM and NL22-NL52 models - use the bearing taper from the Tool Kit and lightly tap on the inner race of the dead end bearing to free up and center the rotor in the body.
    6AM-8AM models - lightly strike the drive end shaft with a soft hammer to push the rotor away from the drive end plate. The rotor must NOT rub on either end plate.
20. Apply a small amount of grease to bearing seal and install the drive end bearing seal by pressing flush with bearing pushing tool from Tool Kit.
21. Reattach end cap.
22. **If the air motor is lubricated**, apply a few drops of Gast #AD220 lubricant into ports and rotate shaft by hand for a few rotations.

EXPLODED PRODUCT VIEW, PARTS & ORDERING INFORMATION

Exploded views are shown for reference only. Units may vary depending upon specific model.

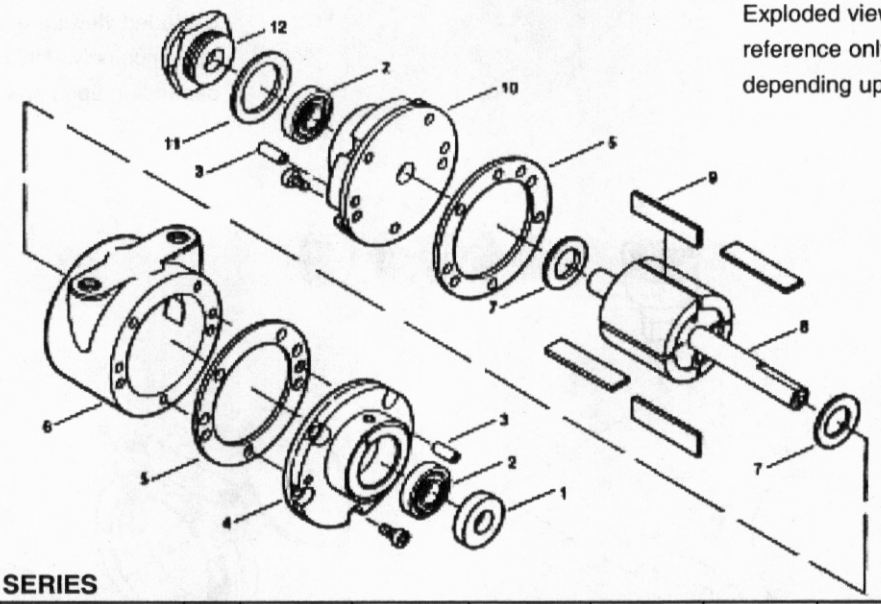

1AM SERIES

REF#	DESCRIPTION	QTY	1AM-NCC-12	1AM-NCW-14	1AM-NRV-39A	1AM-NRV-56	1AM-NRV-60	1AM-NRV-63A
1 Δ	SEAL	1	AC190A	AC190A	AC190A	AC190A	AC190A	AC190A
2 Δ	BEARING	2	AG549	AG549	AG549	AG549	AG549	AG549
3	DOWEL PIN	4	D324A	D324A	D324A	D324A	D324A	D324A
4	DRIVE END PLATE	1	AC537	AC539	AC520	AC520D	AC520D	AC520
5 ΔΔ	SHIMS	2	AC527B	AC527B	AC527B	AC527B	AC527B	AC527B
6	BODY	1	AC521	AC521	AC191	AC191	AC191	AC191
7	CAM RING	2			AC195	AC195	AC195	AC195
8	ROTOR ASSEMBLY	1	AC524	AC536	AC193	AC187	AC607	AC193B
9 Δ	VANE	4 8	AC205A	AC205A	AC259A	AC259A	 AC259A	 AC259A
10	DEAD END PLATE	1	AC538	AC540	AC192	AC192	AC192	AC192
11 Δ	END CAP GASKET	1	AC229	AC229	AC229	AC229	AC229	AC229
12	DEAD END CAP	1	AC228A	AC228A	AC228A	AC228A	AC228A	AC228A
*** Δ	MUFFLER	1	AF350	AF350	AF350	AF350	AF350	AF350
***	FOAM	1	AG896	AG896	AG896	AG896	AG896	AG896
***	SERVICE KIT	1	K200	K200	K201	K201	K278	K278

1UP SERIES

REF#	DESCRIPTION	QTY	1UP-NCC-1A	1UP-NCW-2A	1UP-NRV-3A	1UP-NRV-4	1UP-NRV-10	1UP-NRV-11
1 Δ	SEAL	1	AC190A	AC190A	AC190A	AC190A	AC190A	AC190A
2 Δ	BEARING	2	AG549	AG549	AG549	AG549	AG549	AG549
3	DOWEL PIN	4	D324A	D324A	D324A	D324A	D324A	D324A
4	DRIVE END PLATE	1	AC616	AC520B	AC520	AC520D	AC520	AC520D
5 ΔΔ	SHIMS	2	AC527B	AC527B	AC527B	AC527B	AC527B	AC527B
6	BODY	1	AE899	AE899	AE898	AE898	AE898	AE898
7	CAM RING	2			AC195	AC195	AC195	AC195
8	ROTOR ASSEMBLY	1	AE896	AE895	AE897	AF746	AE319	AE333
9 Δ	VANE	4 8	AE893	AE893	AE894	AE894	 AE894	 AE894
10	DEAD END PLATE	1	AC617	AC192A	AC192	AC192	AC192	AC192
11 Δ	END CAP GASKET	1	AC229	AC229	AC229	AC229	AC229	AC229
12	DEAD END CAP	1	AC228A	AC228A	AC228A	AC228A	AC228A	AC228A
*** Δ	MUFFLER	1	AF350	AF350	AF350	AF350	AF350	AF350
***	FOAM	1	AG896	AG896	AG896	AG896	AG896	AG896
***	SERVICE KIT	1	K285	K285	K286	K286	K298	K298

*** Item not shown.
Δ Denotes parts included in the Service Kit.
ΔΔ Parts used on models manufactured prior to 1998.
Parts listed are for stock models. For specific OEM models, please consult the factory.
When corresponding about or ordering parts, please give complete model and serial numbers.

EXPLODED PRODUCT VIEW, PARTS & ORDERING INFORMATION

Exploded views are shown for reference only. Units may vary depending upon specific model.

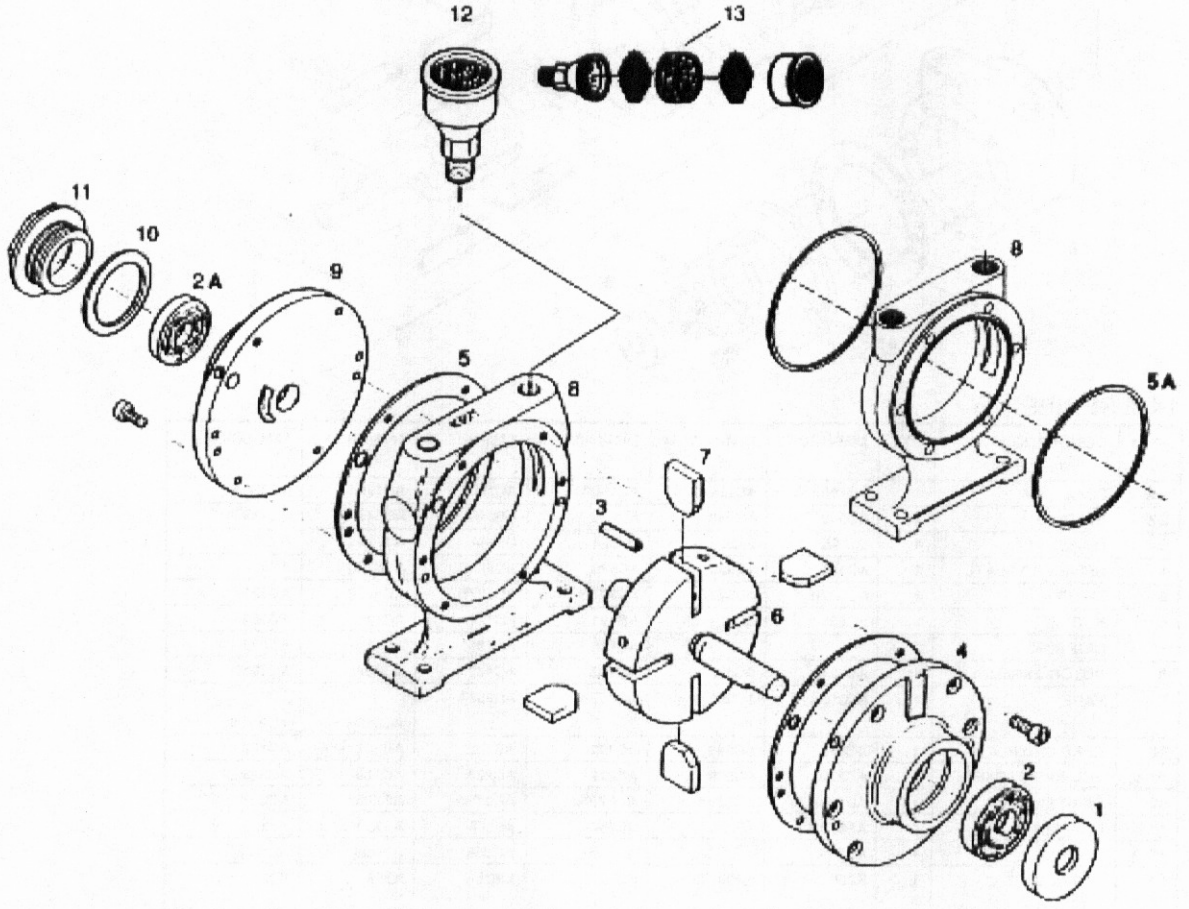

2AM SERIES

REF#	DESCRIPTION	QTY	2AM-FCC-1	2AM-NCW-7A	2AM-FCW-13	2AM-NCC-16	2AM-NCC-43A	2AM-ACC-88 METRIC
1 Δ	SHAFT SEAL	1	AA466B	AA466B	AA466B	AA466B	B2328	B2328
2 Δ	DRIVE END BEARING	1	AA299J	AA299J	AA299J	AA299J	AB519	AB519
2A Δ	DEAD END BEARING	1	AA299J	AA299J	AA299J	AA299J	AA299J	AA299J
3	DOWEL PIN	4	AB162	AB162	AB162	AB162	AB162C	AB162C
4	DRIVE END PLATE	1	AC720	AC726	AC722	AC724	AG708	AK425A
5 Δ **	SHIMS	2	B330	B330	B330	B330	B330	B330
6	ROTOR ASSEMBLY	1	AA470A	AA489A	AA489A	AA470A	AM449A	AM449B
7 Δ	VANE	4	AA13B	AA13B	AA13B	AA13B	AA13B	AA13B
8	BODY	1	AA477	AA467	AA477	AA467	AA467	AA467F
9	DEAD END PLATE	1	AC721	AC723	AC723	AC721	AC721	AB622N
10 Δ	END CAP GASKET	1	AA46	AA46	AA46	AA46	AA46	AA46
11	END CAP	1	AM307D	AM307D	AM307D	AM307D	AM307D	AM307D
12	MUFFLER ASSEMBLY	1	AC980	AC980	AC980	AC980	AC980	AC980
13	MUFFLER FELT	1	AC983	AC983	AC983	AC983	AC983	AC983
***	SERVICE KIT	1	K202	K202	K202	K202	K203A	K203A

*** Item not shown.
** #AL484 (5A) O-ring replaces shim on some models.
Δ Denotes parts included in the Service Kit.
Parts listed are for stock models. For specific OEM models, please consult the factory.
When corresponding or ordering parts, please give complete model and serial numbers.

EXPLODED PRODUCT VIEWS, PARTS & ORDERING INFORMATION

Exploded views are shown for reference only. Units may vary depending upon specific model.

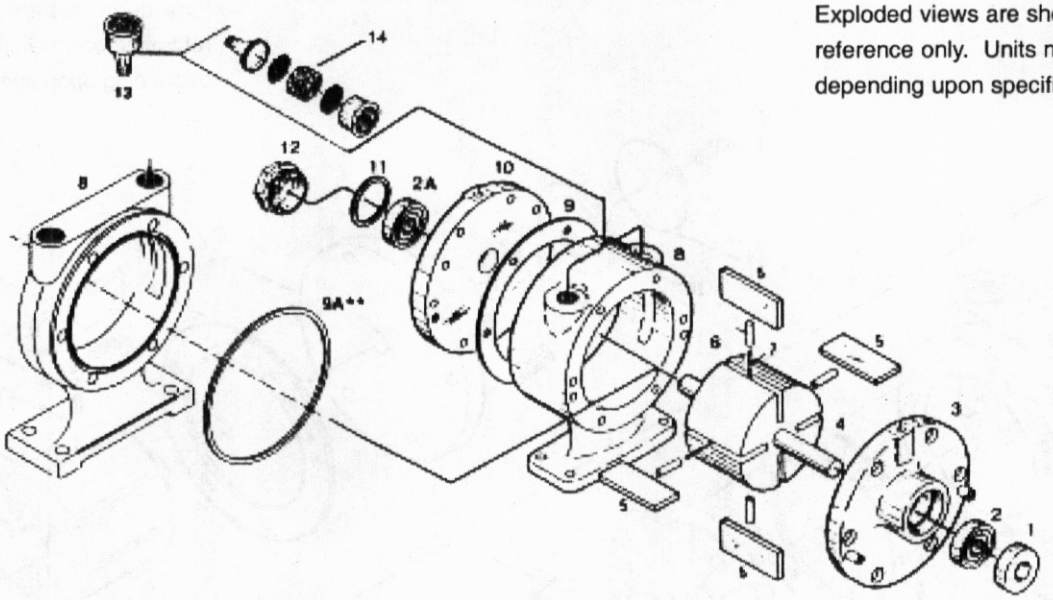

4AM SERIES

REF#	DESCRIPTION	QTY	4AM-FRV-13C	4AM-NRV-22B	4AM-FRV-24	4AM-NRV-50C	4AM-NRV-54A	4AM-NRV-70C	4AM-ARV-119 METRIC	4AM-ARV-120 METRIC
1 Δ	SHAFT SEAL	1	AA466B	AA466B	AA466B (2)	B2328	AA466B	B2328	B2328	B2328
2 Δ	DRIVE END BEARING	1	AA299J	AA299J	AA299J	AB519	AA299J	AB519	AB519	AB519
2A Δ	DEAD END BEARING	1	AA299J	AA299J	AA299J	AA299J	AA299J	AA299J	AA299J	AA299J
3	DRIVE END PLATE	1	AC727	AC665	AC727	AG707	AC665	AG707	AK425A	AK425A
4	ROTOR ASSEMBLY	1	AB617	AB617	AM426	AM455A	AM411	AM319A	AM455C	AM455B
5 Δ	VANE	4 8	AB876	AB876	AB876	AB876	AB876	AB876	AB876	AB876
6 Δ	PUSH PINS	4 8	AM467	AM467	AM467	AM467	AM467	AM467	AM467	AM467
7 Δ	VANE SPRING	2 4	AM466	AM466	AM466	AM466	AM466	AM466	AM466	AM466
8	BODY	1	AM425	AM410	AM425	AM410	AM410	AM410	AM410M	AM410M
9 Δ **	SHIMS	2	B330	B330	B330	B330	B330	B330	B330	B330
10	DEAD END PLATE	1	AC728	AC728	AC727	AC728	AC728	AC728	AB622M	AB622M
11 Δ	END CAP GASKET	1	AA46	AA46		AA46	AA46	AA46	AA46	AA46
12	DEAD END CAP	1	AM307D	AM307D		AM307D	AM307D	AM307D	AM307D	AM307D
13	MUFFLER ASSEMBLY	1	AC980	AC980	AC980	AC980	AC980	AC980	AC980	AC980
14 Δ	MUFFLER FELT	1	AC983	AC983	AC983	AC983	AC983	AC983	AC983	AC983
***	SERVICE KIT	1	K205	K205	K205G	K206A	K279	K280A	K206C	K206B

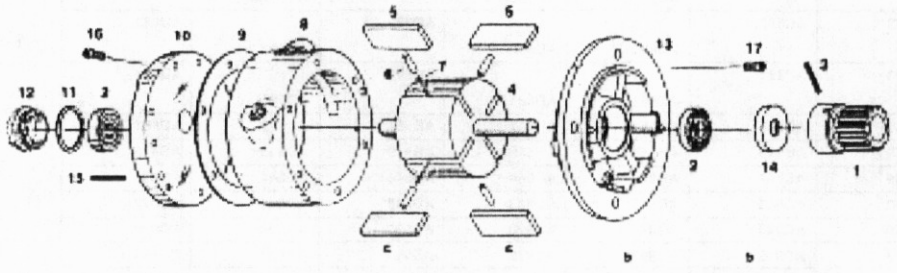

4AM SERIES

REF#	DESCRIPTION	QTY	4AM-RV-75
1	GEAR STD.	1	AA294
2 Δ	BEARING	2	AA299J
3	PIN	1	AA297
4	ROTOR	1	AA293
5 Δ	VANE	4	AB876
6 Δ	SPRING PIN	4	AM467
7 Δ	SPRINGS	2	AM466
8	BODY	1	AM410
9 Δ	SHIMS	2	B330
10	DEAD END PLATE	1	AC728
11 Δ	END CAP GASKET	1	AA46
12	END CAP	1	AM307D
13	DRIVE END PLATE	1	AA424
14	SEAL	1	AA466B
15	DOWEL PINS	4	AB162
16	1/4-28 x .50 PFHMS	6	BB631
17	1/4-28 x .625 SHCS	6	BB634
***	SERVICE KIT	1	K205

*** Item not shown.
** #AL484 (9A) O-ring replaces shims on some models.
Δ Denotes parts included in the Service Kit.

Parts listed are for stock models. For specific OEM models, please consult the factory. When corresponding or ordering parts, please give complete model and serial numbers.

EXPLODED PRODUCT VIEW, PARTS & ORDERING INFORMATION

Exploded views are shown for reference only. Units may vary depending upon specific model.

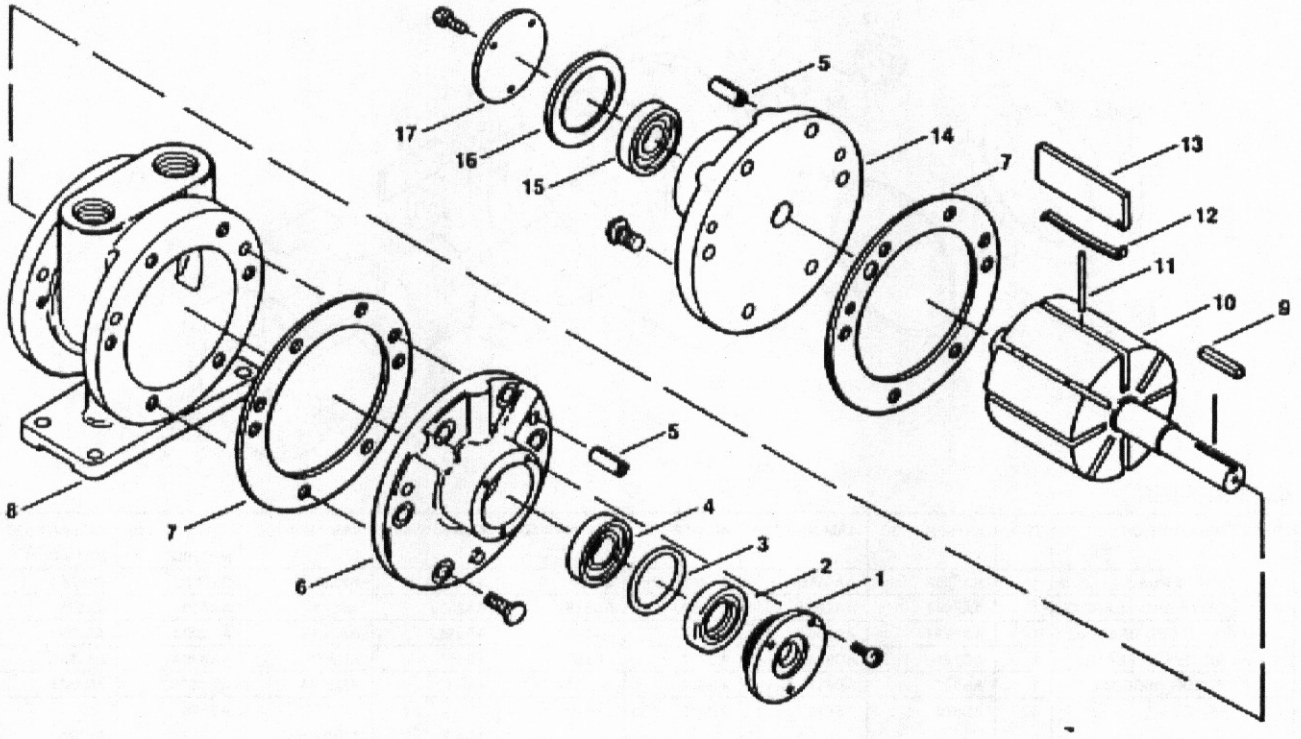

6AM SERIES

REF#	DESCRIPTION	QTY	6AM-FRV-5A	6AM-NRV-7A	6AM-NRV-22A NEMA	6AM-FRV-23A	6AM-ARV-54	6AM-ARV-55	6AM-NRV-11A
1	DRIVE END CAP	1	AD642A	AD642A	AD642A	AD642A	AC988	AC988	AD642A
2 Δ	SHAFT SEAL	1	AC849	AC849	AC849	AC849	AK423	AK423	AC849
3 Δ	O-RING	1	AD649	AD649	AD649	AD649	AC989	AC989	AD649
4 Δ	DRIVE END BEARING	1	AD638A	AD638A	AD638A	AD638A	AC894B	AC894B	AD638A
5	DOWEL PIN	4	AB162	AB162	AB162C	AB162	AB162C	AB162C	AB162C
6	DRIVE END PLATE	1	AD651	AD666	AD667	AD651	AK424	AK424	AD667
7 Δ	BODY GASKET	2	AD641	AD641	AD641	AD641	AD641	AD641	AD641
8	BODY	1	AD650A	AD665	AD665	AD650A	AD665D	AD665D	AD665
9	KEY	1	AB136	AB136	AB136	AB136	AK422	AK422	AB136
10	ROTOR ASSEMBLY	1	AD652	AD652	AC398	AC779	AD648E	AD648D	AD648
11 Δ	PUSH PIN	2	AD655A	AD655A			AD655A		AD655A
		4			AD655A	AD655A		AD655A	
12 Δ	VANE SPRING	4	AD692	AD692			AD692		AD692
		8			AD692	AD692		AD692	
13 Δ	VANE	4	AD691	AD691			AD691		AD691
		8			AD691	AD691		AD691	
14	DEAD END PLATE	1	AD651	AD651	AD651	AD651	AD651	AD651	AD651
15 Δ	DEAD END BEARING	1	AB519	AB519	AB519	AB519	AB519	AB519	AB519
16 Δ	END CAP GASKET	1	AD644	AD644	AD644	AD644	AD644	AD644	AD644
17	DEAD END CAP	1	AD643	AD643	AD643	AD643	AD643	AD643	AD643
***	MUFFLER ASSEMBLY	1	AC990	AC990	AC990	AC990	AC990	AC990	AC990
***	MUFFLER FELT	1	AC993	AC993	AC993	AC993	AC993	AC993	AC993
***	SERVICE KIT	1	K208	K208	K281	K281	K281A	K281B	K208

*** Item not shown.
Δ Denotes parts included in the Service Kit.
Parts listed are for stock models. For specific OEM models, please consult the factory.
When corresponding or ordering parts, please give complete model and serial numbers.

EXPLODED PRODUCT VIEW, PARTS & ORDERING INFORMATION

Exploded views are shown for reference only. Units may vary depending upon specific model.

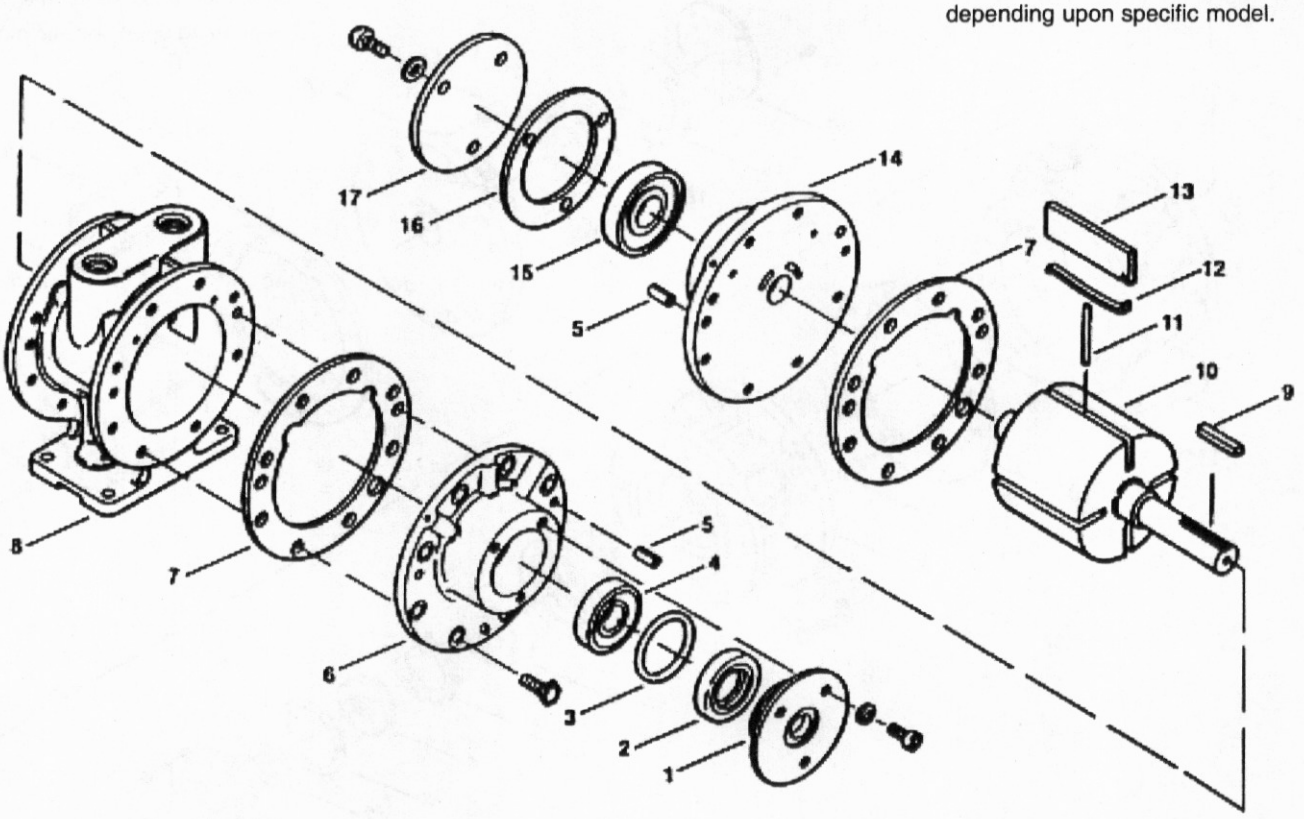

8AM SERIES

REF#	DESCRIPTION	QTY	8AM-FRV-2B	8AN-NRV-5B	8AM-NRV-28A	8AM-FRV-30A	8AM-NRV-32A	8AM-NRV-42A	8AM-ARV-70 METRIC	8AM-ARV-71 METRIC
1	DRIVE END CAP	1	AC835A	AC835A	AC988	AC835A	AC988	AC835A	AC988	AC988
2 Δ	SHAFT SEAL	1	AC839	AC839	AB936	AC839	AB936	AC839	AK420	AK420
3 Δ	O-RING	1	AC808	AC808	AC989	AC808	AC989	AC808	AC989	AC989
4 Δ	DRIVE END BEARING	1	AA735B	AA735B	AB927	AA735B	AB927	AA735B	AB927	AB927
5	DOWEL PIN	4	AB162	AB162	AB162	AB162	AB162	AB162	AB162	AB162
6	DRIVE END PLATE	2	AC964	AC963	AC965	AC964	AC965	AC963	AK421	AK421
7 Δ	BODY GASKET	2	AC888	AC888	AC888	AC888	AC888	AC888	AC888	AC888
8	BODY	1	AC877A	AC878C	AC878C	AC877A	AC878C	AC878C	AC878G	AC878G
9	KEY	1	AB136D	AB136D	AB136D	AB136D	AB136D	AB136D	AK668	AK668
10	ROTOR ASSEMBLY	1	AC977	AC977	AC986	AC977A	AC986A	AC977A	AC986D	AC986C
11 Δ	PUSH PIN	2 4	AC879	AC879	AC879	AC879	AC879	AC879	AC879	AC879
12 Δ	VANE SPRING	4 8	AC817	AC817	AC817	AC817	AC817	AC817	AC817	AC817
13 Δ	VANE	4 8	AC816	AC816	AC816	AC816	AC816	AC816	AC816	AC816
14	DEAD END PLATE	1	AC964	AC964	AC964	AC964	AC964	AC964	AC964	AC964
15 Δ	DEAD END BEARING	1	AC894B	AC894B	AC894B	AC894B	AC894B	AC894B	AC894B	AC894B
16 Δ	END CAP GASKET	1	AC837	AC837	AC837	AC837	AC837	AC837	AC837	AC837
17	DEAD END CAP	1	AC836	AC836	AC836	AC836	AC836	AC836	AC836	AC836
***	MUFFLER ASSEMBLY	1	AC990	AC990	AC990	AC990	AC990	AC990	AC990	AC990
***	MUFFLER FELT	1	AC993	AC993	AC993	AC993	AC993	AC993	AC993	AC993
***	SERVICE KIT	1	K210	K210	K211	K283	K282	K283	K282A	K282B

*** Item not shown.
Δ Denotes parts included in the Service Kit.
Parts listed are for stock models. For specific OEM models, please consult the factory.
When corresponding or ordering parts, please give complete model and serial numbers.

EXPLODED PRODUCT VIEW, PARTS & ORDERING INFORMATION

Exploded views are shown for reference only. Units may vary depending upon specific model.

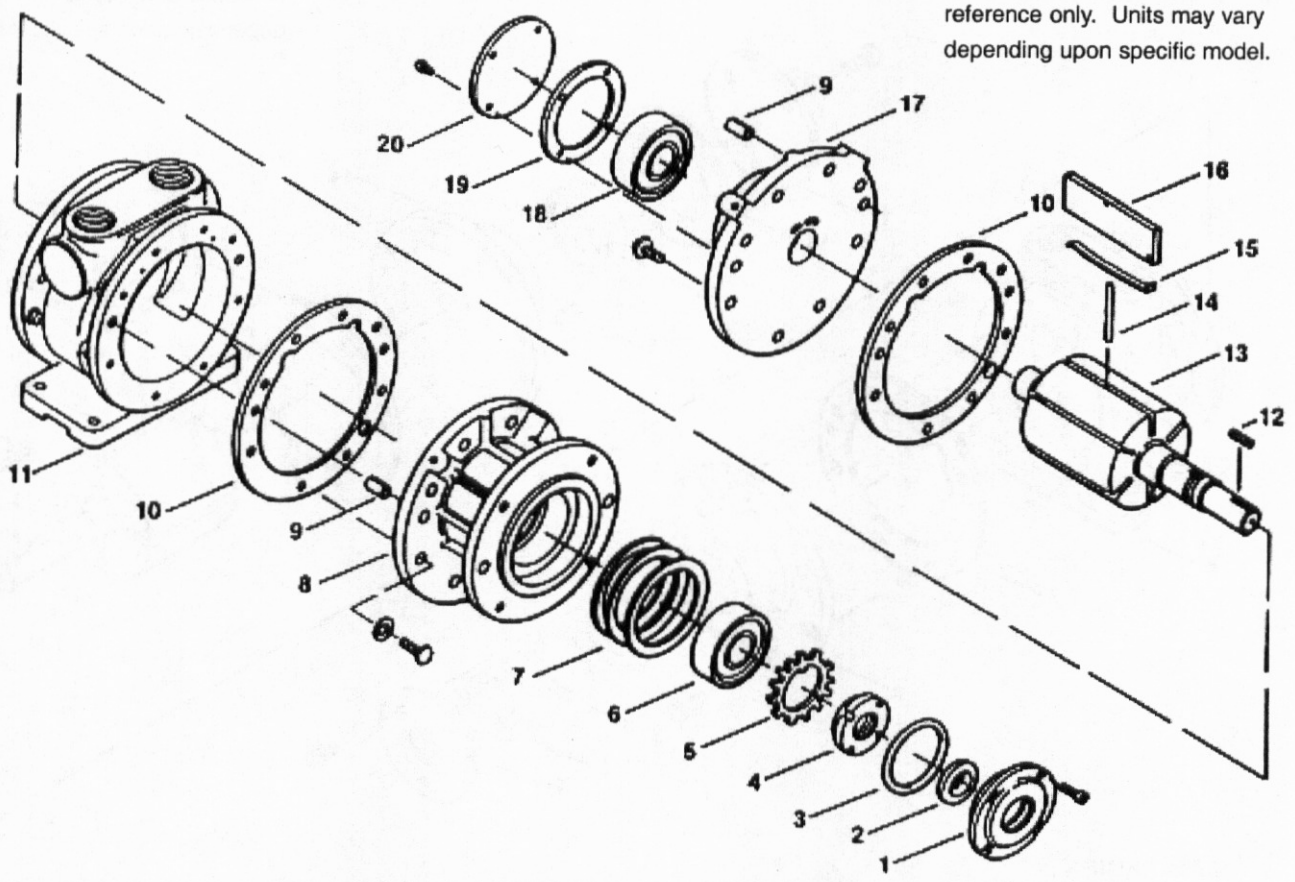

16AM SERIES

REF#	DESCRIPTION	QTY	16AM-FCC-2	16AM-FRV-2	16AM-FRV-13	16AM-FCW-28
1	DRIVE END CAP	1	AD816	AD816	AD816	AD816
2 Δ	SEAL	1	AC627	AC627	AC627	AC627
3 Δ	O-RING	1	AD823	AD823	AD823	AD823
4	LOCKNUT	1	AD784	AD784	AD784	AD784
5 Δ	LOCKWASHER	1	AD712	AD712	AD712	AD712
6 Δ	DRIVE END BEARING	1	AB777A	AB777A	AB777A	AB777A
7	SPACER		AD786	AD786	AD786	AD786
8	DRIVE END PLATE	1	AD771A	AD820A	AC323	
9	DOWEL PIN	4	AB162A	AB162A	AB162A	AB162A
10 Δ	SPACER GASKET	2	AD788	AD788	AD788	
11	BODY	1	AD770	AD819	AD819	AD770B
12	DRIVE KEY	1	AC628	AC628	AB136D	AC628
13	ROTOR ASSEMBLY	1	AD775	AD794	AE807	
14 Δ	PUSH PIN	3		AD822	AD822	
15 Δ	VANE SPRING	6		AD796A	AD796A	
16 Δ	VANE	6	AD781	AD795	AD795	AD781
17	DEAD END PLATE	1	AD773A	AD821A	AD821A	
18	DEAD END BEARING	1	AD802	AD802	AD802	AD802
19	END CAP GASKET	1	AG406	AG406	AG406	AG406
20	DEAD END CAP	1	AG405	AG405	AD405	AG405
***	SERVICE KIT	1	K212	K213	K213	K212

*** Item not shown.
Δ Denotes parts included in the Service Kit.
Parts listed are for stock models. For specific OEM models, please consult the factory.
When corresponding or ordering parts, please give complete model and serial numbers.

General Information:

The product nameplate specifies all information required when ordering parts or requests for information. The type of lubricant required for unit is also specified on the nameplate.

Product Use Criteria:

- All worm gear reducers require that the air motor be mounted so that the intake and exhaust piping is at a 90° angle to the centerline of the reducer output shaft.
- Gear motors are NOT self-locking. If a brake is required for safety (for air pressure failure, etc.) contact your Gast representative.
- Worm gear reducers are shipped with a plug in the top pipe plug. The plug must be removed and the breather plug installed for proper operation.
- Operating an air motor without venting will create internal pressure build-up which can damage the internal parts of gear motor.
- Check the oil level in units which have been stored or not operated for a period of time.
- Gear motors require proper lubrication. Insufficient oil level can cause loss of performance, damage or failure of the gear motor.

Gear Reducer Specifications

Model	GR11	GR20	GR25
Speed Range (Reducer Output Shaft)	33.3 to 400 RPM	30 to 300 RPM	20 to 200 RPM
Gear Reduction	15:1	10:1	15:1
Maximum Allowable End Thrust With Zero Overhung Load. (Reducer Output Shaft)	100 lbs./45,4 kg	200 lbs/90,8 kg @300 RPM to 800 lbs/363,2 kg at 30 RPM	250 lbs/113,5 kg at 200 RPM to 800 lbs/363,2 kg at 20 RPM
Maximum Allowable Overhung Load With Zero End Thrust. (Reducer Output Shaft)	100 lbs/45,4 kg at 333 RPM to 200 lbs/90,8 kg at 33.3 RPM	200 lbs/90,8 kg at 300 RPM to 600 lbs/272,4 kg at 30 RPM	200 lbs/90,8 kg at 200 RPM to 600 lbs/272,4 kg at 20 RPM
Lubrication	Use a 300 ssu at 100°F/38°C turbine quality lubricant – Gast #AG292A, Gulf Harmony 53, Shell Tellus 33, Socony DTE heavy medium or Humble Nuto 53. **For horizontal operation,** remove both plugs and add oil to top hole until other hole overflows. **For vertical operation,** fill to overflow point of uppermost hole.		

Worm Gear Reducer Series A-F Gear Reducer Specifications

All output shafts are in the standard location.

Model	Air Motor	Ratio
AG803	4AM	20:1
AG805	4AM	40:1
AG807	4AM	60:1
AG809	6AM	10:1
AG811	6AM	20:1
AG816	8AM	20:1

Service, Parts or Repair

For service, parts or repair of the worm gear reducer, contact the manufacturer listed on the nameplate.

Change output shaft direction

1. Remove drain plug and drain oil from unit.
2. Remove end cover and seal cage cap screws. While supporting output shaft, remove end cover and shims from unit. Keep shims with cover.
3. Remove output shaft and seal cage together from extension side. Keep shims with seal cage.
4. Insert seal cage, shims and sub-assembly into housing from the side opposite from which they were removed.
5. Insert seal cage cap screws and tighten with light pressure.
6. Assemble end cover with shims. Insert end cover cap screws and tighten with light pressure.
7. Turn high speed shaft in both directions to check that gear train is running freely.
8. Cross-tighten seal cage and end cover cap screws.

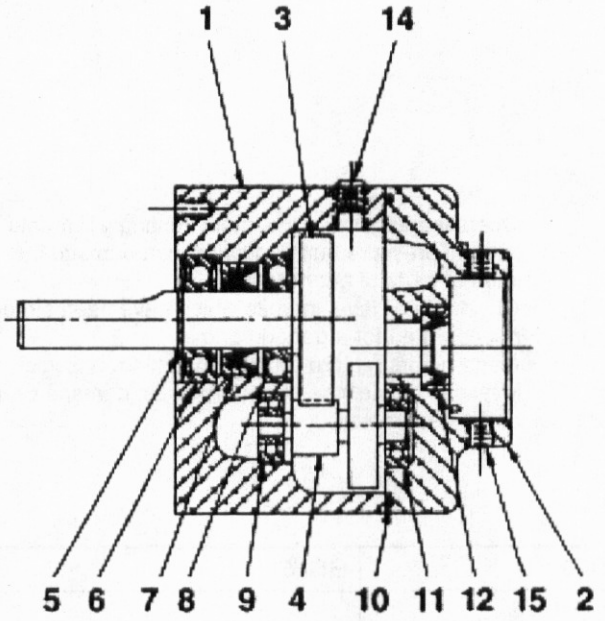

GR11 SERIES

REF# NO.	DESCRIPTION	QTY	PART
1	GEAR HOUSING	1	AC737
2	GEAR HOUSING COVER	1	AC736
3	GEAR SHAFT	1	AC739
4	CLUSTER GEAR	1	AC738
5	SNAP-RING	1	AE189
6	BEARING	1	AE196A
7	SEAL	1	AA517A
8	BEARING	1	AA498
9	BEARING	1	AE195
10	O-RING	1	AD823
11	BEARING	1	AE197
12	SEAL	1	AA623D
13	SCREWS	4	BB542
14	PIPE PLUG	2	BA500
15	SET SCREW	2	BB626
***	DOWEL PIN	2	AE882

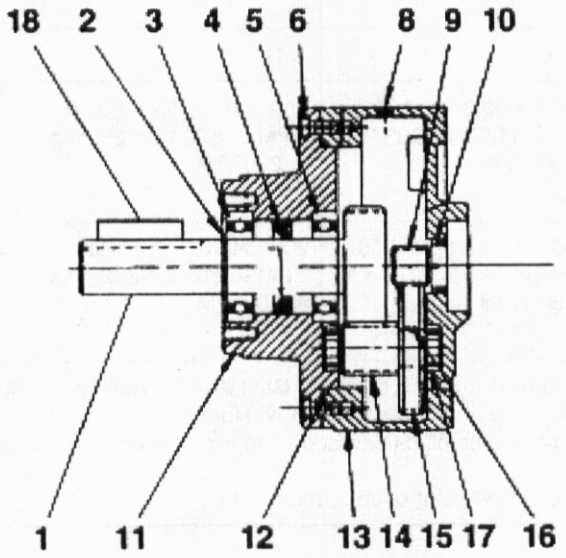

GR20 SERIES

REF# NO.	DESCRIPTION	QTY	PART
1	GEAR SHAFT - OUTPUT	1	AE848
2	RETAINING RING	1	AE853
3	BEARING	1	AE858
4	OIL SEAL	1	AE852
5	BEARING	1	AE857
6	SCREW	6	BB652
***	DOWEL PIN	2	AF482
8	MAGNETIC DRAIN PLUG	2	AH471
9	GEAR - INPUT	1	AA294
10	OIL SEAL	1	AE851
11	HOUSING COVER	1	AE849
12	O-RING	1	AE854
13	GEAR HOUSING	1	AE850
14	GEAR SHAFT	1	AE845
15	GEAR - INTERMEDIATE	1	AE846
16	KEY	1	AE855
17	BEARING	2	AG549
18	KEY	1	AC628

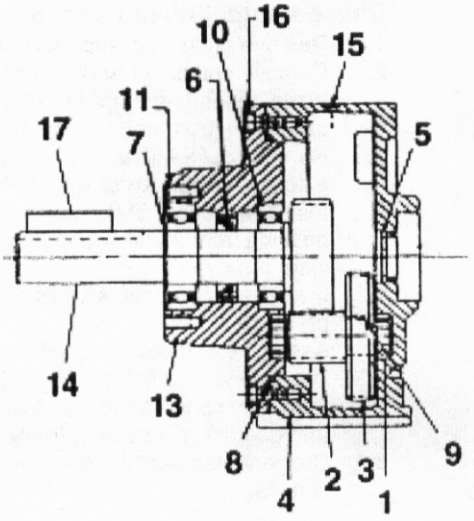

GR25 SERIES

REF# NO.	DESCRIPTION	QTY	PART
1	BEARING	2	AG549
2	GEAR SHAFT	1	AE845
3	GEAR INTERMEDIATE	1	AE846
4	GEAR HOUSING	1	AE850
5	SEAL	1	AE851
6	SEAL	1	AE852
7	RETAINING RING	1	AE853
8	O-RING	1	AE854
9	KEY	1	AE855
10	BEARING	1	AE857
11	BEARING	1	AE858
***	DOWEL PIN	2	AF482
13	HOUSING COVER	1	AH278
14	GEAR SHAFT - OUTPUT	1	AH279
15	MAGNETIC DRAIN PLUG	2	AH471
16	SCREWS	6	BB652
17	KEY	1	AC628

*** Item not shown.

WARRANTY

Gast finished products, when properly installed and operated under normal conditions of use, are warranted by Gast to be free from defects in material and workmanship for a period of twelve (12) months from the date of purchase from Gast or an authorized Gast Representative or Distributor. In order to obtain performance under this warranty, the buyer must promptly (in no event later than thirty (30) days after discovery of the defect) give written notice of the defect to Gast Manufacturing Incorporated, PO Box 97, Benton Harbor Michigan USA 49023-0097 or an authorized Service Center (unless specifically agreed upon in writing signed by both parties or specified in writing as part of a Gast OEM Quotation). Buyer is responsible for freight charges both to and from Gast in all cases.

This warranty does not apply to electric motors, electrical controls, and gasoline engines not supplied by Gast. Gast's warranties also do not extend to any goods or parts which have been subjected to misuse, lack of maintenance, neglect, damage by accident or transit damage.

THIS EXPRESS WARRANTY EXCLUDES ALL OTHER WARRANTIES OR REPRESENTATIONS EXPRESSED OR IMPLIED BY ANY LITERATURE, DATA, OR PERSON. GAST'S MAXIMUM LIABILITY UNDER THIS EXCLUSIVE REMEDY SHALL NEVER EXCEED THE COST OF THE SUBJECT PRODUCT AND GAST RESERVES THE RIGHT, AT ITS SOLE DISCRETION, TO REFUND THE PURCHASE PRICE IN LIEU OF REPAIR OR REPLACEMENT.

GAST WILL NOT BE RESPONSIBLE OR LIABLE FOR INDIRECT OR CONSEQUENTIAL DAMAGES OF ANY KIND, however arising, including but not limited to those for use of any products, loss of time, inconvenience, lost profit, labor charges, or other incidental or consequential damages with respect to persons, business, or property, whether as a result of breach of warranty, negligence or otherwise. Notwithstanding any other provision of this warranty, BUYER'S REMEDY AGAINST GAST FOR GOODS SUPPLIED OR FOR NON-DELIVERED GOODS OR FAILURE TO FURNISH GOODS, WHETHER OR NOT BASED ON NEGLIGENCE, STRICT LIABILITY OR BREACH OF EXPRESS OR IMPLIED WARRANTY IS LIMITED SOLELY, AT GAST'S OPTION, TO REPLACEMENT OF OR CURE OF SUCH NONCONFORMING OR NON-DELIVERED GOODS OR RETURN OF THE PURCHASE PRICE FOR SUCH GOODS AND IN NO EVENT SHALL EXCEED THE PRICE OR CHARGE FOR SUCH GOODS. GAST EXPRESSLY DISCLAIMS ANY WARRANTY OF MERCHANTABILITY OR FITNESS FOR A PARTICULAR USE OR PURPOSE WITH RESPECT TO THE GOODS SOLD. THERE ARE NO WARRANTIES WHICH EXTEND BEYOND THE DESCRIPTIONS SET FORTH IN THIS WARRANTY, notwithstanding any knowledge of Gast regarding the use or uses intended to be made of goods, proposed changes or additions to goods, or any assistance or suggestions that may have been made by Gast personnel.

Unauthorized extensions of warranties by the customer shall remain the customer's responsibility.

CUSTOMER IS RESPONSIBLE FOR DETERMINING THE SUITABILITY OF GAST PRODUCTS FOR CUSTOMER'S USE OR RESALE, OR FOR INCORPORATING THEM INTO OBJECTS OR APPLICATIONS WHICH CUSTOMER DESIGNS, ASSEMBLES, CONSTRUCTS OR MANUFACTURES.

This warranty can be modified only by authorized Gast personnel by signing a specific, written description of any modifications.

MAINTENANCE RECORD

DATE	PROCEDURE PERFORMED

TROUBLESHOOTING CHART

Problem					
Low Torque	Low Speed	Won't Run	Runs Hot	Runs Well Then Slows Down	Reason & Remedy For Problem.
●	●	●			Dirt or foreign material present. Inspect and clean.
●	●	●			Internal rust. Inspect and clean.
●	●	●	●	●	Vanes misaligned. Realign vanes.
●	●				Low air pressure. Increase pressure.
	●				Air line too small. Install larger line(s).
	●			●	Restricted exhaust. Inspect and repair.
●	●	●		●	Motor is jammed. Disassemble and repair.
	●			●	Air source inadequate. Inspect and repair.
	●			●	Air source too far from motor. Reconfigure setup.

AUTHORIZED SERVICE FACILITIES

Gast Manufacturing Inc.
2550 Meadowbrook Road
Benton Harbor, MI 49022
TEL: 269-926-6171
FAX: 269-925-8288
www.gastmfg.com

Gast Manufacturing Inc.
505 Washington Avenue
Carlstadt, NJ 07072
TEL: 201-933-8484
FAX: 201-933-5545
www.gastmfg.com

Air-Oil Products Corp.
301 30th Street NE 31,#112
Auburn, WA 98002
TEL: 800-282-2672
FAX: 877-808-4601
www.air-oil.com

Brenner Fiedler & Assoc
13824 Bentley Place
Cerritos, CA 90701
TEL: 800-843-5558
TEL: 310-404-2721
FAX: 310-404-7975
www.brenner-fiedler.com

D & F Distributors
1144 Indy Court
Evansville, IN 47725
TEL: 812/867-2441
FAX: 812/867-6822
www.dfdistrib.com

John Henry Foster Co.
4700 Lebourget Drive
St. Louis, MO 63134-0820
TEL: 314-427-0600
TEL: 1-800-444-0522
FAX: 314-427-3502
www.jhf.com

Hydraulic & Pneumatic Sales
11100 Park Charlotte Blvd.
Charlotte NC 28273
TEL: 704-588-3234
FAX: 704-588-1569
www.hpsales.com

James E. Watson & Co.
29 Doran Ave.
Marietta, GA 30060
Ph. 770/422-1154
www.jwatsonco.com

Wainbee Limited
5789 Coopers Avenue
Mississauga, Ontario
Canada L4Z 3S6
TEL: 905-568-1700
FAX: 905-568-0083
http://www.wainbee.ca

Wainbee Limited
215 boul Brunswick
Pointe Claire, Quebec
Canada H9R 4R7
TEL: 514-697-8810
FAX: 514-697-3070
http://www.wainbee.ca

Gast Manufacturing Co., Ltd.
Beech House
Knaves Beech Business Centre
Loudwater, High Wycombe
Bucks, England HP10 9SD
TEL: 011-44 1628 532600
FAX: 011-44 1628 532470
http://www.gastltd.com

Japan Machinery Co., Ltd
Central PO Box 1451
Tokyo, 100-91 Japan
TEL: 813 3573 5421
FAX: 813 3571 7865
or: 81-3-3571-7896
www.japanmachinery.com

WATTS

Combination Unit

WARNING! The polycarbonate plastic material used to manufacture the plastic bowls and the sight glasses on the filter and lubricator may be attacked by certain chemicals. DO NOT use these units on systems with air supplied by a compressor lubricated with synthetic oils or oils containing phosphate esters or chlorinated hydrocarbons. These oils carry over into the air lines and chemically attack and possibly rupture the bowls and sight glasses. Also, DO NOT expose these units to materials such as carbon tetrachloride, trichlorethylene, acetone, paint thinner, cleaning fluids, or other harmful materials, for they too will cause the plastic to craze and/or rupture. For use in environments where any of these chemicals may be present, consult the factory for approval prior to installation.

Installation
Before installing, blow out pipe line to remove scale and other foreign matter. These units have DRYSEAL pipe threads; use pipe compound or tape sparingly to male threads only. Install units in pipeline so air will flow in direction indicated on bodies. Install as near as possible vertical to pipe line.

FILTER

BOWL	MAX. PRESS	MAX. TEMP
PLASTIC	150 PSI	120°F
STEEL	300 PSI	180°F
STEEL OR ZINC W/SIGHTGLASS	250 PSI	150°F

Maintenance
To maintain maximum filtering efficiency and to avoid excessive pressure drop, the filter must be kept clean. On standard filters, open drain cock (turn clockwise) periodically and drain off any bowl accumulation before it reaches level of lower baffle. Bowl drainage is automatic in the "Piston Drain" model, however, manual draining can also be done by removing the bowl. A visible coating of dirt or condensate on the filter element surface or an excessive pressure drop is an indication that cleaning is necessary.

Cleaning
To clean, it is not necessary to remove filter from the line, disassembly is simple and does not require tools— use the drawings on the reverse side of this sheet as a guide. Before disassembly, shut off the air supply and depressurize filter. Clean all parts except plastic bowl and/or sight glass with alcohol and blow out filter body before reassembly. Wash filter element in alcohol and blow out from the inside. Plastic bowls or metal bowls with sight glass must be cleaned with household soap only.

"Auto Drain" Operation
"Auto Drain" filters are equipped with a float actuated device which automatically ejects liquid contaminates. If supplied in kit form, Part No. SA602MD-M3, the "Auto Drain" can be installed by simply removing the flange ring and bowl and then removing the draincock from the bowl. Insert the "Auto Drain" in place of the removed draincock and reassemble in reverse order. Maximum pressure: 175 PSI.

"Piston Drain" Operation
The "Piston Drain" mechanism is operated by the pressure drop created as air flow is initiated or as the air line is depressurized. In order to drain properly, there must be sufficient dynamic pressure drop to trigger the drain mechanism. The "Piston Drain" will not function with minimal flow and pressure variations or on constant flow applications. When supplied in kit form, remove bowl and replace with "Piston Drain" assembly. Maximum pressure: 175 PSI.

REGULATOR

MAX PRESS 300 PSI
MAX TEMP 120°F

Reduced Pressure Adjustment
Clockwise turning of the adjusting screw increases the reduced or regulated pressure. With relieving-type regulators the reduced pressure follows the adjustment of the screw, with non-relieving regulators adjustment for lower reduced pressure will not be obtained until the reduced pressure system is "bled off" or until air flow starts.

Maintenance
If the air supply is kept clean, the regulator should provide long periods of uninterrupted service. Erratic regulator operation or loss of regulation is most always due to dirt in the disc area and cleaning is in order.

Cleaning
Depressurize regulator, remove bottom plug, spring, and disc. Clean parts with denatured alcohol, wipe off seat and blow out body with compressed air. Reassemble parts as a unit and screw into regulator before tightening bottom plug make sure disc is in center hole in body. Should regulator continue to malfunction, obtain repair kit and replace parts indicated.

LUBRICATOR

BOWL	MAX. PRESS	MAX. TEMP
PLASTIC	150 PSI	120°F
STEEL	300 PSI	180°F
STEEL OR ZINC W/SIGHTGLASS	250 PSI	150°F

Lubricant
For average conditions, the use of high quality SAE #10 (S.U.V> 150-200 SEC. @100°F) oil is recommended. Other lubricants as specified by the maker of the equipment to be lubricated may be used if not heavier than SAE #40 (S.U.V. 800 SEC. @100°F).

Filling
Lubricators can be filled while under pressure and without shutting down equipment—slowly remove either fill plug and fill to 1/4" to top of bowl using correct oil. For best results use a long spout oil can so that the tip can be inserted into top of bowl.

Adjustment
The "Dial Set" knob is factory set so that when turned to zero (0) no oil is delivered to the venturi for atomization and equipment is not being lubricated. To adjust oil drip rate, turn on the air, start flow and set know to obtain the desired drip rate—visible through the sight glass. As a start, one to two drops per minute is suggested—correct lubrication being a matter of experience and demand. Clockwise rotation of knob decreases oil feed rate. To check lubrication hold thumbnail or a mirror near the equipment exhaust. A heavy film indicates over-lubrication and the drip rate should be reduced by turning know to a lower setting.

Operation
For proper automatic fill operation the oil inlet pressure to lubricator must be maintained between 10 and 200 PSI above air pressure to lubricator.

Maintenance—Cleaning
If both air and oil are kept clean and the oil level never allowed below end of tube in the bowl the lubricator should provide long periods of unattended service. Cessation of oil dripping through the sight glass, irrespective of knob adjustment is an indication that cleaning is necessary.

To clean, it is not necessary to remove lubricator from the line. Depressurize and disassemble using drawing as a guide. In most instances cleaning is needed only in the oil metering area. Pull off adjusting knob and remove needle valve assembly by turning out large hex nut, remove needle valve seat and clean removed parts with alcohol—making sure hole in seat is clear. With a #57 drill make sure hole in bottom of sight glass area is open. Blow out lubricator body with compressed air before reassembly. **Caution: Plastic bowls and metal bowls with sight glass must be cleaned with household soap only.**

See other side for Replacement Parts List.

WATTS AIR FILTER AND LUBRICATOR

REPLACEMENT PARTS
Order by Repair Kit Number

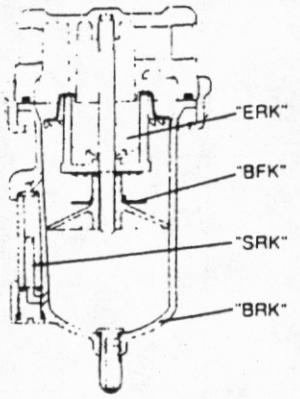

SIGHTGLASS REPAIR KIT (SRK)

KIT NO.	SIZE
RKB605WY	1/4" & 3/8"
RKB605WA	1/2"
RKB605WB	3/4" thru 2½"

BOWL REPLACEMENT KIT (BRK)

KIT NO.	BOWL	SIZE
BK602Y	PLASTIC	1/4" & 3/8"
BK602A	PLASTIC	1/2"
BK603A	STEEL	1/2"
BK603B	STEEL	3/4" thru 2½"
BK605WA	ZINC W/SIGHTGLASS	1/2"
BK605WB	ZINC W/SIGHTGLASS	3/4" thru 2½"

BAFFLE REPAIR KIT (BFK)

KIT NO.	SIZE
RK602Y	1/4" & 3/8"
RK602A	1/2"
RK602B	3/4" & 1"
RK602C	1¼" & 1½"
RK602G	2" & 2½"

ELEMENT REPAIR KIT (ERK)

KIT NO.	SIZE	ELEMENT
EK602Y	1/4" & 3/8"	40m
EK602VY	1/4" & 3/8"	5m
EK602A	1/2"	40m
EK602VA	1/2"	5m
EK602B	3/4" thru 1½"	40m
EK602VB	3/4" thru 1½"	5m
EK602G	2" & 2½"	40m

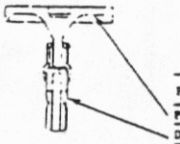

"PISTON DRAIN" FILTER

PART NAME	KIT NAME	KIT NUMBERS 1/4" 3/8"	KIT NUMBERS 1/2"
PISTON DRAINCOCK	PISTON DRAIN KIT	RK602SY	RK602SA

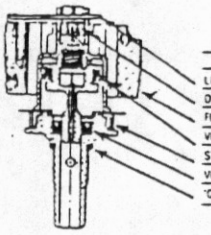

"AUTO DRAIN"
SA-602MD-M3

PART NAME	KIT NUMBER
LEVER PIN	RK 602MD M3
DISC ASSEMBLY	
FLOAT ASSEMBLY	
VEE SEA	
STRAINER	
VEE SEAL	
'O' RING	

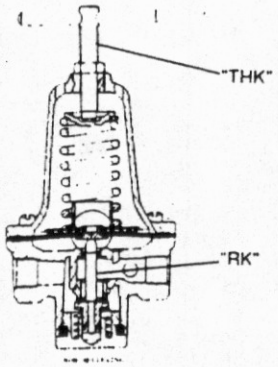

TEE HANDLE KIT (THK)

KIT NO.	SIZE
TK16Y	1/4" & 3/8"
TK119A	1/2"
TK119B	3/4" thru 1½"



REPAIR KIT (RELIEVING)

KIT NO.	SIZE
RK119Y	1/4" & 3/8"
RK119A	1/2"
RK119B	3/4" & 1"
RK119D	1¼" & 1½"

REPAIR KIT (NON-RELIEVING) (RK)

KIT NO.	SIZE
RK118Y	1/4" & 3/8"
RK118A	1/2"
RK118B	3/4" & 1"
RK118D	1¼" & 1½"

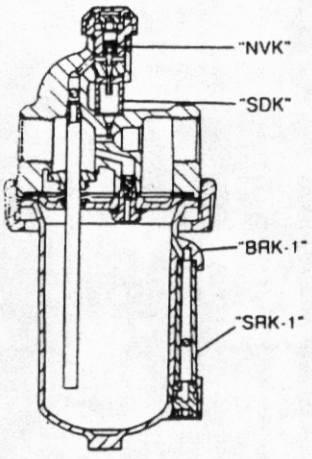

SIGHTGLASS REPAIR KIT (SRK-1)

KIT NO.	SIZE
RKB605WY	1/4" & 3/8"
RKB605WA	1/2"
RKB605WB	3/4" thru 1½"
RKB605X30A	1/2" (2 QT. BOWL)
RKB605X30B	3/4" thru 1½" (2 QT. BOWL)

NEEDLE VALVE REPAIR KIT (NVK)

KIT NO.	SIZE
RK606Y-1	1/4" thru 1½"

SIGHT DOME REPAIR KIT (SDK)

KIT NO.	SIZE
RK606SY	1/4" thru 1½"

BOWL REPLACEMENT KIT (BRK-1)

KIT NO.	BOWL	SIZE
BK606Y	PLASTIC	1/4" & 3/8"
BK606A	PLASTIC	1/2"
BK603A	STEEL	1/2"
BK603B	STEEL	3/4" thru 1½"
BK609WA	ZINC W/SIGHTGLASS	1/2"
BK609WB	ZINC W/SIGHTGLASS	3/4" thru 1½"
BK606X30A	STEEL (2 QT. W/SIGHTGLASS)	1/2"
BK606X30B	STEEL (2 QT. W/SIGHTGLASS)	3/4" thru 1½"

WATTS

LIMITED WARRANTY. The Company warrants each product against defects in material and workmanship for a period of one year from the date of original shipment. In the event of such defects within the warranty period, the Company will, at its option, replace or recondition the product without charge. This shall constitute the exclusive remedy for breach of warranty, and the Company shall not be responsible for any incidental or coincidental damages, including without limitation damages or other costs resulting from labor charges, delays, vandalism, negligence, fouling caused by foreign material, damage from adverse air conditions, chemicals, or any other circumstances over which the company has no control. This warranty shall be invalidated by any abuse, misuse, misapplication or improper installation of the product.

THE COMPANY MAKES NO OTHER WARRANTY. ALL OTHER WARRANTIES, ORAL OR WRITTEN, EXPRESSED OR IMPLIED, INCLUDING WARRANTIES OF MERCHANTABILITY OR FITNESS FOR A SPECIFIC PURPOSE ARE HEREBY EXCLUDED AND DISCLAIMED. IN NO EVENT SHALL THE COMPANY BE LIABLE FOR INCIDENTAL OR CONSEQUENTIAL DAMAGES.

The liability of the Company for all loss or damage resulting from non-conforming goods or tender, including breach of any and all warranties, shall be limited to the refund of the purchase price of the particular goods with respect to the loss or damage occurred.

REVISION:

This is the hazard alert symbol: ⚠ When you see this symbol, be aware that personal injury or property damage is possible. The hazard is explained in the text following the symbol. Read the information carefully before proceeding.

The following is an explanation of the three different types of hazards:

⚠**DANGER** Severe personal injury or death will occur if hazard is ignored.
⚠ **WARNING** Severe personal injury or death can occur if hazard is ignored.
⚠ **CAUTION** Minor injury or property damage can occur if hazard is ignored.

GENERAL INFORMATION

The air motor is designed to be driven by compressed air and under no circumstances be driven with any other gases. The air motor must not be driven by fluids, particles, solids or any substance mixed with air, particularly combustible substances likely to cause explosions.
⚠ **DANGER** Do not drive with flammable or explosive gases.
⚠ **CAUTION** The air motor is designed for air only. Do not allow corrosive gases or particulate material to enter the motor. Water vapor, oil-based contaminants, or other liquids must be filtered out.

Ambient temperature should not exceed 121°C (250°F).

INSTALLATION

The muffler is shipped with the air motor, but not installed. Install a moisture trap and filter in the air line ahead of motor. For efficiency of output and control of speed, use air lines the same size or in the next pipe size larger than the intake port of the motor. A single rotation motor will operate properly in only one direction. A reversible motor will work equally in both directions. A 4-way valve which can be connected by piping to both air ports of the motor will make reversing possible. When coupling or connecting the motor to a driven member, avoid any end or side thrust on the shaft and especially **do not** hammer on the shaft itself or on the coupling or pulley you might attach.

LUBRICATION - USE A DETERGENT SAE #10 AUTOMOTIVE ENGINE OIL (GAST PART #AD220)

An automatic air line lubricator, must be installed in the air line just ahead of the air motor. The lubricator should be adjusted to feed one drop of oil for every 50-75 CFM of air going through the motor. Air consumption figures for various models at various speeds and airline pressures can be obtained from your local Gast representative or the factory. Lubrication is necessary for all internal moving parts and rust prevention. Excessive moisture in the air line can cause rust formation in the motor and might also cause ice to form in the muffler due to expansion of air through the motor. The moisture problem can be corrected by installing a moisture separator in the line and also by installing an aftercoolor between the compressor and air receiver.

MOUNTING THE AIR MOTOR

⚠ **WARNING** Beware of any exposed or movable parts. Proper guards should be in place to prevent severe personal or property damage.
The air motor should be mounted on a solid base plate, preferably of metal which in turn should be anchored to a shelf, the floor, or other machinery.

OPERATION

⚠**WARNING** Solid or liquid material exiting the unit can cause eye or skin damage. Keep away from air stream.
⚠**WARNING** Always disconnect the air supply before servicing.
⚠ **CAUTION** Do not allow the air motor to "run free" at high speeds with no loads. Excessive internal heat build up, loss of internal clearances and rapid motor damage will result. See table below for air motor limitations.
⚠**WARNING** These models will exceed 85 db(A)sound level at some operating loads and speeds. Hearing protection should be worn when in close proximity to these models.

Air Motor Performance Limits

Motor Size	Maximum R.P.M.	Maximum Pressure psig	Maximum Torque lb.-inch	Maximum Air Consumption cfm
6AM	3000	100	115	130
8AM	2500	100	190	175
16AM	2000	100	375	280

Maximum Torque and Air Consumption can vary depending on specific operating conditions.

STARTING

The starting torque is less than the running torque and could vary depending on the position at which the vanes stop in relation to the air intake port. The speed and torque can be regulated by using a pressure regulator or a simple shut-off valve to obtain desired power and conserve air.

SHUTDOWN AND STORAGE PROCEDURE

1. Turn off air intake supply and remove plumbing.
2. Remove air motor from the connecting machinery.
3. Use clean, dry air at low pressure to "flush out" condensates, such as water.

⚠**WARNING** Solid or liquid material exiting the unit can cause eye or skin damage. Keep away from the air stream.

4. Re-lubricate the air motor with a squirt of oil in the chamber. Rotate the shaft by hand several times.
5. Plug or cap each port. The unit is now ready for storage.

SERVICING

If unit requires more than installation of a service kit, it is usually quickest and least expensive to send the unit in for repair.

⚠ **WARNING** To prevent explosive hazard DO NOT drive this air motor with combustible gases. Injury and/or property damage can result.

⚠ **WARNING** DO NOT USE KEROSENE OR OTHER COMBUSTIBLE SOLVENTS.

⚠ **WARNING** Eye protection is REQUIRED. Keep face away from exhaust port and do not flush unit with flammable solvent.

⚠ **WARNING** Foreign material exiting the air motor can be hazardous.

⚠ **CAUTION** Do not drive the air motor in excess of the recommended speeds.

If the motor is sluggish or inefficient, try flushing with solvent*.

-To flush a unit, disconnect air line and muffler and add several teaspoons or spray solvent directly into the motor.

-Rotate the shaft by hand in both directions for a few minutes, reconnect the air line and slowly apply pressure until there is no trace of solvent in exhaust air.

-Flush unit in a well ventilated area.

-Re-lubricate the motor with a squirt of oil in the chamber.

NOTE: If the vanes need replacing or foreign materials are present in motor chamber, an experienced mechanic may remove the end plate opposite the drive shaft end. DO NOT PRY WITH A SCREWDRIVER. It will dent the surface of the plate and body causing leaks.

A puller tool should be used which will remove the endplate while maintaining the position of the shaft. New vanes should have the edge with the corners cut on angle or the notched edge (if reversible) towards the bottom of the vane slot.

*Recommended solvent for air motors and lubricated pumps is Gast Flushing solvent part # AH255B ,
Loctite Safety Solvent, or Inhibisol Safety Solvent.

Air Motor Clearance Chart

US/IMPERIAL (IN) / METRIC (mm)		
Model	Total End Clearance	Top Clearance
6AM	0.0035 / 0.0889	0.0015 / 0.0381
8AM	0.0048 / 0.1219	0.0015 / 0.0381
16AM	0.0060 / 0.1524	0.0015 / 0.0381

GAST WARRANTY

REGARDLESS OF CAUSE, if a product you buy from Gast does not work right, Gast will repair or replace it once, at no charge, for up to one year from the date of shipment from the factory.

In the course of repair or replacement, Gast may send you written recommendations on how to prevent a problem from happening again. Gast reserves the right to withdraw this warranty if you do not follow these recommendations. Customer is responsible for freight charges both to and from Gast in all cases.

This warranty does not apply to electric motors, electrical controls and gasoline engines, which Gast obtains from other manufacturers. A motor or engine carries only the warranty of the company that makes it.

THIS WARRANTY IS EXCLUSIVE AND IS IN LIEU OF ALL OTHER WARRANTIES, WHETHER WRITTEN, ORAL OR IMPLIED, INCLUDING THE WARRANTY OF MERCHANTABILITY AND OF FITNESS FOR ANY PARTICULAR PURPOSE. GAST'S LIABILITY IS IN ALL CASES LIMITED TO THE REPLACEMENT PRICE OF ITS PRODUCT. GAST SHALL NOT BE LIABLE FOR ANY OTHER DAMAGES, WHETHER CONSEQUENTIAL, INDIRECT, OR INCIDENTAL, ARISING FROM THE SALE OR USE OF ITS PRODUCTS.

Gast's sales personnel may modify this warranty, but only by signing a specific, written description of any modifications.

Troubleshooting Guide

Reason	Low Torque	Low Speed	Won't Run At All	Runs Hot	Runs Good Then Slows Down
Dirt, foreign material	X	X	X		
Internal rust	X	X	X		
Misalignment	X	X	X	X	X
Insufficient air pressure	X	X			
Too small of airline		X			
Restricted exhaust		X			X
Poor lubrication	X	X	X	X	
Jammed machine	X	X	X		X
Compressor too small		X			X
Compressor too far from unit		X			X

IMPORTANT INFORMATION

⚠ **WARNING** Gast air-powered gearmotors are not self locking. In applications where a brake is required for safety, in case of air pressure failure, contact your Distributor.

Before starting a stored unit or re-starting an inactive unit, the oil level should be returned to the proper level. See Recommended Oil Chart.

SPECIFICATIONS FOR GR11 GEAR REDUCERS:

Speed Range: (Reducer output Shaft) 33.3 RPM to 400 RPM
Gear Reduction: 15:1
Maximum Allowable End Thrust: (Reducer output Shaft) 100 lbs. with 0 overhung load.
Maximum Allowable Overhung Load: (Reducer output Shaft) Ranges from 100 lbs. at 400 RPM with 0 end thrust to 200 lbs. at 33.3 RPM with 0 end thrust.

SPECIFICATIONS FOR GR20 GEAR REDUCERS:

Speed Range: (Reducer ouput Shaft) 30 RPM to 300 RPM
Gear Reduction: 10:1
Maximum Allowable End Thrust: (Reducer output Shaft) Ranges from 200 lbs. at 300 RPM with 0 overhug load to 800 lbs. at 30 RPM with overhung load.
Maximum Allowable Overhung Load: (Reducer output Shaft) Ranges from 200 lbs. at 300 RPM with 0 end thrust to 600 lbs. at 33.3 RPM with 0 end thrust.

SPECIFICATIONS FOR GR25 GEAR REDUCERS:

Speed Range: (Reducer ouput Shaft) 20 RPM to 200 RPM
Gear Reduction: 15:1
Maximum Allowable End Thrust: (Reducer output Shaft) Ranges from 135 lbs. at 200 RPM with 0 overhung load to 535 lbs. at 20 RPM.
Maximum Allowable Overhung Load: (Reducer output Shaft) Ranges from 135 lbs. at 200 RPM with 0 end thrust to 400 lbs. at 20 RPM.

WORM GEAR REDUCERS

IMPORTANT INFORMATION

A breather plug is shipped along with the gear reducer. It must be installed in place of the top pipe plug (used for shipping), to allow proper venting.

⚠ **CAUTION** Operation without venting can cause internal pressure to build and will damage internal parts of the gear reducer.

Before starting a stored unit or re-starting an inactive unit, the oil level should be returned to the proper level.

RECOMMENDED OIL FOR GEARBOX

To assist in selection of proper lubrication we have listed names by company. For service, parts, or repair of the WORM GEAR REDUCER, contact the manufacturer shown on the gear reducer label.

MANUFACTURER	50 to 125°F (10 to 52°C) Ambient Temperature AGMA Compound No. 8
Amoco	American Cyl. Oil 680
Cities Service Oil Co.	Citgo Cyl. Oil 680-7
Gulf Oil Corporation	Senate 680
Mobil Oil Company	Extra HECLA, Super C.O. or Mobil Gear 680
Kendall	Kendco 206 Comp.
Texaco Incorporated	Honor Cyl. Oil 680 or Meropa 680
Shell Oil Company	Valvata Oil J-680 or Omala 680
Unocal	Steaval C-200

AS WE MAKE IMPROVEMENTS TO THE ***REED***
PNEUMATIC SPRAYING MACHINE **MODEL *209***,
WE LIKE TO SUPPLY YOU, THE CUSTOMER, WITH UPDATED
INFORMATION, WHICH APPLIES TO YOUR SPRAYING MACHINE.

THIS SECTION IS PROVIDED AS A PLACE TO STORE
SERVICE BULLETINS AS YOU RECEIVE THEM
FROM ***REED*** **MANUFACTURING.**

REED
CONCRETE PLACING EQUIPMENT

SERVICE BULLETIN

BULLETIN NO: SB001

DATE: FEBRUARY 5, 1998

TO: ALL REED DEALERS

SUBJECT: REED WARRANTY PROGRAM

Each REED Concrete Placing Trailer Pump, Truck Mounted Boom Pump and Dry-mix Spraying Gun, undergoes before delivery a thorough Quality Assurance inspection, a performance check and final testing. However, even with these precautions the possibility exists that after delivery, for some reason, a component may fail.

This is the reason for warranty. If this should happen to one of your machines during the first 12 months or 1000 pumping hours after delivery, there is a good chance the failed component could be replaced under warranty.

REED has updated and formalized its **WARRANTY PROGRAM** and this bulletin is issued to make all dealers aware of the program.

Enclosed is a supply of our new **WARRANTY CLAIM** forms. From this point on, all warranty claims must be submitted on these forms. Also, please find a description of the program, coverage and how to make a claim and its submission. We suggest you give this some careful attention. Briefly some noteworthy items are:

- Do not return any failed part unless requested by **REED**
- Purchase the replacement part through normal channels from **REED**. Submit your claim noting the invoice number of the replacement part. Upon approval of the claim, a credit will be issued.
- Every effort will be made to process claim within 2 weeks from receipt except for those occasions where the part is to be returned.

Should questions arise during your review, please do not hesitate to contact us.

We appreciate the opportunity to be of service.

Sincerely,

Mike Wickstrom
Service Manager

servbull.doc

REED
CONCRETE PLACING EQUIPMENT

WARRANTY PROGRAM

WARRANTY PROGRAM POLICY

REED Concrete Placing Equipment is designed and engineered to perform as stated on published specifications. Only quality materials and workmanship are used in the manufacture of these products. As a back up for the product manufactured by ***REED***, a guarantee against defects in design and workmanship of components is provided for each machine.

The ***REED*** guarantee/warranty states, in general, that ***REED*** will replace free of charge any components found to be defective within the time frame of the warranty period. There are exceptions to some components which are not the responsibility of ***REED***. These are noted elsewhere.

A formal printed policy is available and depicts in more detail the warranty and description. However, for your ready reference the following is offered:

A. WARRANTY PERIOD

- ALL CONCRETE PLACING MACHINES

  The warranty period is for twelve (12) months from date of delivery to initial user or 1000 pumping hours whichever comes first.

- NEW PARTS WARRANTY

  For parts sold through the ***REED*** Parts Department the warranty is ninety (90) days from invoice ship date.

- REPLACEMENT WARRANTY PARTS

  Replacement parts provided under the terms of the machine warranty are for the warranty period applicable to the unit in which they were installed as if such parts were original components of the machine.

B. WARRANTY COVERAGE

- DEFECTIVE PARTS

  Unless otherwise authorized the replacement part **MUST** be **PURCHASED** from ***REED***. Once warranty claim is received and approved, ***REED*** will provide credit to the dealer/user for their cost of the replacement part as invoiced by ***REED***.

- LABOR

  No labor time and related compensation will be provided by ***REED*** to dealers/users or others to perform work under this warranty policy.

- TRAVEL TIME

  No travel time, mileage or other expenses will be compensated by ***REED*** to dealers/users or others to perform work under this warranty policy.

- FREIGHT, IMPORT DOCUMENTATION, CUSTOM DUTY

  Any expense incurred for freight, import duty and documentation will not be reimbursed by ***REED*** in association with this warranty policy.

C. EXCLUSIONS

- CHASSIS AND RELATED COMPONENTS (TRUCK MOUNTED UNITS)

  The warranty for the chassis is handled by the chassis manufacturer and their dealer network. Prior to putting the truck in service it is suggested you contact the nearest manufacturer dealership.

- ENGINE - TRAILER UNITS

  The engine warranty is handled by the engine manufacturer and their dealer network. The terms and conditions of their warranty will apply. Contact the local engine dealer for specifics on warranty of the engine.

- NORMAL WEAR

  This pertains to items that have failed as a result of normal wear and tear to the product including but not limited to material cylinder and hydraulic cylinder piston components, delivery systems, pins, chains, bushings, seals, concrete pump wear parts, brakes, filter elements, fluids and tires.

- DAMAGES

  Caused by transport of equipment or parts, improper set-up or installation, operator error, improper operation or storage, environmental conditions, accidents, improper mechanical techniques employed by anyone or any other cause other than a structural defect in materials or workmanship.

- MAINTENANCE

  Caused by failure to perform any scheduled maintenance or routine maintenance as specified in technical manual on any structural or mechanical component.

- MODIFICATIONS

  Any non-authorized changes or modifications of any kind to the product. Any modification must be authorized and approved in writing by ***REED*** Engineering Department.

- ABUSE

  Any accidental or intentional abuse of product including but not limited to neglect, loading beyond capacity or any operation of the equipment beyond the limits set forth by ***REED*** documentation and as depicted in the appropriate technical manual.

D. SUBMISSION OF CLAIM BY DEALER/USER

Should a component failure be encountered during the warranty period and should it fall within the guidelines of the ***REED*** **WARRANTY POLICY** the following procedure is to be followed to claim warranty:

1. REPLACEMENT PART

   - Obtain the replacement part by ordering it from the **REED PARTS DEPT.** through normal channels. You will be **INVOICED** for the part.

   - If the part has been previously ordered from ***REED*** and is in your replacement stock inventory you may choose to use that part.

2. COMPLETE THE CLAIM FORM

   REED has supplied you with a pre-numbered Warranty Claim Form which consists of four (4) parts. This and only this form is **ACCEPTABLE. DUPLICATE** copies of the form are **NOT ACCEPTABLE.** If you do not have the proper form, contact the ***REED*** Service Department. They will send you a supply.

REED
CONCRETE PLACING EQUIPMENT

WARRANTY PROGRAM

REED
CONCRETE PLACING EQUIPMENT

WARRANTY CLAIM

13822 OAKS AVENUE
CHINO, CA. 91710 909-364-2100

NO. (1)
Date:

Distributor Account Number:
Distributor: (2)
Address:
City:
State: Zip Code:
Phone: ( )

End User Account Number:
End User: (3)
Address:
City:
State: Zip Code:
Phone: ( )

MACHINE PUMP DATA

Model (4) Serial No. (5) In Service Date (6)
Hours of Operation (7) Failure Date (8) Repair Date (9)

NOTE - Hold deficient part(s) until requested by *REED* or until claim is approved. All parts requested to be returned must have a return authroization number provided by *REED*, shipped freight prepaid.Parts must ship within 30 days from *REED* request.

RETURN AUTHORIZATION NO. (10) SHIP DATE (11)

PART NUMBER	DESCRIPTION (12)	QTY.	NET PRICE	TOTAL PRICE	*REED* REPLACEMENT PART INVOICE NO. (13)

Describe Failure and How it Occurred (14)

REED comments

Claim Approved for

$

REED Use - Claim Approved ☐ Denied ☐

Signed Date

Dealer Signature (15)

Date

REVISION:

REED
CONCRETE PLACING EQUIPMENT

WARRANTY PROGRAM

The following instructions are offered for completing the **WARRANTY CLAIM FORM**. Refer to sample of form. Circled numbers on form correspond to items below. **FILL IN**:

1. Date your claim is written
2. Distributor name and address
3. End user name and address
4. Model number of unit affected
5. Serial number of unit affected
6. Date unit was first placed in service
7. Hours (from hourmeter) of operation at time of failure
8. Date when failure occurred
9. Date when unit was repaired
10. Return Authorization number as received from ***REED*** Service Dept. This will only apply when failed component is requested to be returned by ***REED***
11. Date when failed part is shipped back to ***REED***
12. List ***REED*** part number, description of part, quantity and price of part.
13. List ***REED*** invoice number sent you when replacement part was purchased
14. Briefly describe failure and how it occurred
15. Dealers signature and date

The claim form **MUST BE COMPLETELY FILLED OUT**. Claims lacking specific, accurate information will be returned **UNPROCESSED**. If additional room is needed to describe the failure or to list the parts used, attach a separate sheet and identify those sheets with the **SAME WARRANTY CLAIM NUMBER**.

3. SUBMITTING TO ***REED***

When all appropriate data has been entered on the claim and signed, proceed as follows:

- Remove copies of form marked **"DEALER"** (yellow) and **"RETURN AUTHORIZATION"** (green). The Dealer copy is for your records and the Return Authorization copy is to be retained in the event ***REED*** requests the return of the part.

- Mail the ***"REED"*** copy (white) and **"ACCOUNTING"** copy (pink) along with any back-up data such as a copy of the replacement part **INVOICE** to ***REED***. **DO NOT FAX COMPLETED FORM** and send only **FORM ORIGINALS**.

REED
CONCRETE PLACING EQUIPMENT

WARRANTY PROGRAM

E. RETURN OF FAILED COMPONENT

Depending on the type of part and circumstance surrounding the component failure, the possibility exists that ***REED*** may request that the failed part be returned to them for investigation and evaluation purposes or to apply for warranty from the manufacturer of the part.

- Upon receipt of your warranty claim and before claim is approved, ***REED*** will inform you in writing if the part is to be returned. On this correspondence a **RETURN AUTHORIZATION** number will be given to you.

- This number is to be written in the appropriate area on the **RETURN AUTHORIZATION** copy (green) of the warranty form. Include this copy as part of your packing slip. Also write the number on a tag and attach to the part.

- Parts requested to be returned must be shipped back to ***REED*** within 30 days from issuing of the **RA** number. Failure to do so will cause warranty claim to be **DENIED**.

- Returned parts are to be properly packaged and shipped freight **PREPAID**.

- Any parts received by ***REED*** without the **PROPER RA** number will be shipped back at **DEALER/USER EXPENSE**.

- If claim is approved and no request to return parts from ***REED*** has been made, then parts can be discarded.

F. APPROVAL/DENIAL OF CLAIM

Every effort will be made to process the warranty claim within 2 weeks from receipt.

- APPROVAL

  Once your claim has been approved by ***REED***, the pink copy will be forwarded to our Accounting Dept. They in turn will issue a credit against the invoice for the replacement purchased part.

  In the meantime a fax or notification will be sent you indicating the claim and the amount approved.

REED
CONCRETE PLACING EQUIPMENT

WARRANTY PROGRAM

- DENIAL

If your warranty claim is denied for any reason, a fax or notification will be sent to you indicating reasons for denial. Should you have any dispute with the decision, you have the right to have the decision reconsidered. You must present your arguments in **WRITING** within 15 days of your receipt of the claim denial.

REED CONCRETE PLACING EQUIPMENT	WARRANTY CLAIM 13822 OAKS AVENUE CHINO, CA. 91710 909-364-2100	NO. Date: (1)

Distributor Account Number:	End User Account Number:
Distributor: (2)	End User: (3)
Address:	Address:
City:	City:
State: Zip Code:	State: Zip Code:
Phone: ( )	Phone: ( )

MACHINE PUMP DATA

Model (4) Serial No. (5) In Service Date (6)
Hours of Operation (7) Failure Date (8) Repair Date (9)

NOTE - Hold deficient part(s) until requested by *REED* or until claim is approved. All parts requested to be returned must have a return authroization number provided by *REED*, shipped freight prepaid. Parts must ship within 30 days from *REED* request.

RETURN AUTHORIZATION NO. (10) SHIP DATE (11)

PART NUMBER	DESCRIPTION (12)	QTY.	NET PRICE	TOTAL PRICE	*REED* REPLACEMENT PART INVOICE NO. (13)

Describe Failure and How it Occurred (14)

REED comments

Claim Approved for $

REED Use - Claim Approved ☐ Denied ☐

Signed Date

Dealer Signature (15)

Date

REVISION: